CATALOG NO. CN-5

• TRW® CINCH CONNECTORS

AN ELECTRONIC COMPONENTS DIVISION OF TRW INC.

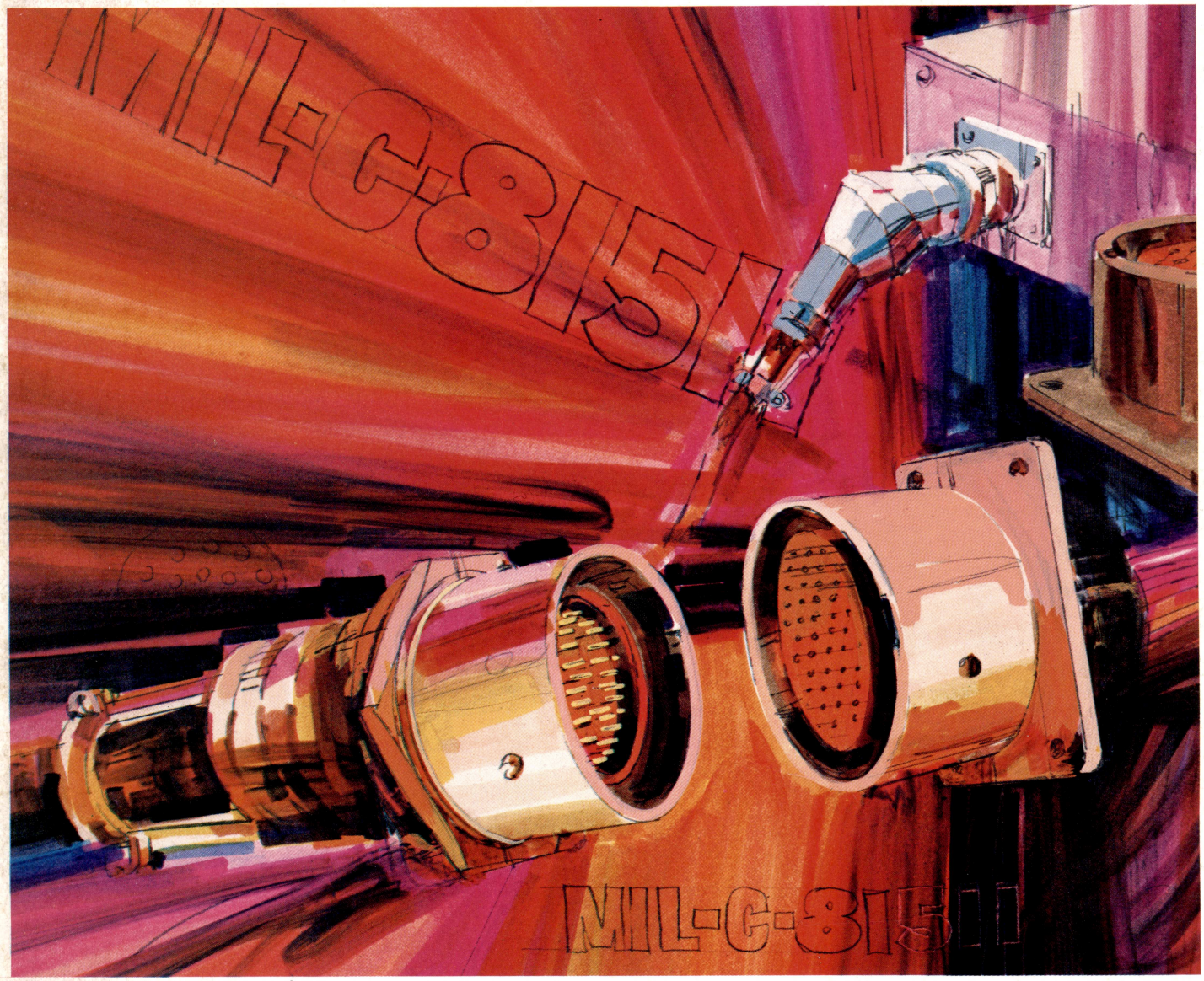

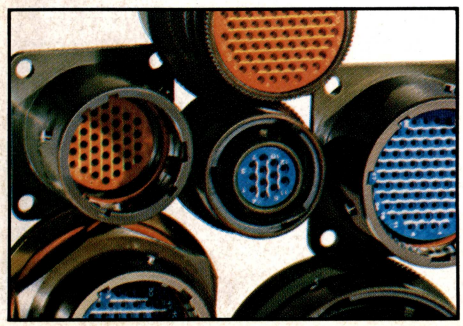

Mil-C-81511 Miniature Connectors

MANUFACTURED UNDER LICENSE AGREEMENT WITH BUNKER RAMO CORP.

Supersedes Catalog No. CN-5 Dated 5-71

CINCH-NULINE ASTRO / 348® MIL-C-81511 HIGH DENSITY CONNECTORS

CONTENTS

Series Description; 100% No-Scoop 1
Design Features; Grounding and Shielding 2-3
Connector Family 4
Shell Styles 5
Dimensions 6-7
Contacts 8-9
Insert Arrangements; Alternate Shell Positions 10-11
How To Order 12-13
Performance Characteristics; Materials and Finishes 14-15
Hardware Accessories 16-17
"J" Adapters 18-21
Assembly and Disassembly Procedures 22-25

BEST HIGH DENSITY DESIGN

Astro/348 has been designed to eliminate the costly space-wasters in removable contacts. Problem-causing metal retention clips for each contact are gone. Instead, a single one-piece molded dielectric retention system locks Poke-Home contacts in place. Originally designed as a high density subminiature, Astro/348 turned out to be the best high density miniature and standard connector ever made. It packs more contacts of every size into standard shells than any other design. MIL-C-81511* has established the standard connector family for the next decade.

***Astro/348 and Poke-Home are Trade Marks of the Bunker-Ramo Corporation.*

CINCH-NULINE/348 VS. COMPETITION

Here's what Astro/348 in a size **18 shell** can give you:

Astro/348	Closest Alternative
85 #23-22 Contacts	67 #22 M or D Contacts
38 #20 Contacts	32 #20 Contacts
21 #16 Contacts	11 #16 Contacts
9 #12 Contacts	8 #12 Contacts

All at less cost, and in less space, for each circuit carried.

LARGER ON THE INSIDE

The single-piece retention disc gives other excellent advantages in addition to density. Dielectric wall thicknesses in the subminiature #23-22 contact arrangements **are equal to standard miniatures.** With greater density, #20's, #16's and #12's provide dielectric separation comparable to standard miniature and power connectors.

MIL-C-81511 CONSTRUCTIONS

Cinch-Nuline/348 Connectors are available in two basic constructions: Standard (Series 2) and Long (Series 1). Within the two series Cinch-Nuline provides three different types of connectors, all fully qualified to MIL-C-81511, including latest revisions.

Series 2—Standard

Cinch-Nuline Pt. No.	Description
348-4XEXX-XXXX	**150° C. Oper. Temp.**
348-6XEXX-XXXX	**200° C. Oper. Temp.**
348-8XEXX-XXXX	**175° C. Oper. Temp., Fluid Resistant**

Series 1—Long

Cinch-Nuline Pt. No.	Description
348-3XEXX-XXXX	**150° C. Oper. Temp.**
348-5XEXX-XXXX	**200° C. Oper. Temp.**
348-7XEXX-XXXX	**175° C. Oper. Temp., Fluid Resistant**

(See pages 12 and 13 for full explanation of part numbering)

NEW RACK AND PANEL

All of the advantages of the standard circular ASTRO/348 are now available in a unique rack and panel design which utilizes the basic series 1 inserts and design concepts. See page 3 for information.

**MIL-C-81511 is a Military Specification for Connectors, Electric, Circular, High Density, Quick Disconnect, Environment Resistant.*

100% NO-SCOOP CONSTRUCTION TO MIL-C-81511 (SERIES 1)

"No-Scoop" means that it is impossible to damage pin contacts in a connector when the mating connector is accidentally wiped across its face, as in blind-mating connectors. Cinch-Nuline offers 100% No-Scoop Series 1 MIL-C-81511 connectors—complete contact protection design whether pins are in the plug or the receptacle.

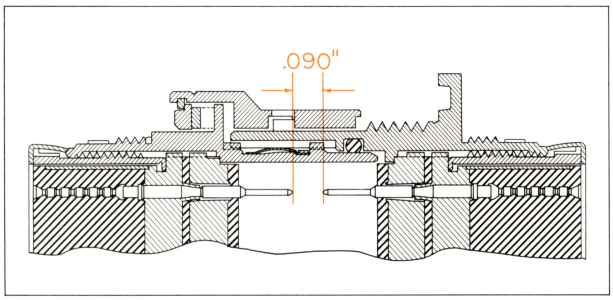

Even if a plug with pin contacts and a receptacle with pin contacts are inadvertantly mated, Series 1 Astro/348 connectors offer full protection: .090 separates the two contact sides.

In the Series 1 connectors it has been possible to completely ring the interior of the plug with grounding fingers for improved EMI protection.

3X, 5X and 7X identifies the Series 1 (100% No-Scoop) construction; 4X, 6X and 8X is the standard Astro/348 Series 2 (50% No-Scoop) construction, see How To Order information, page 12. When pin contacts are used in the Series 2 receptacle only (by usage, 80% of the time) these connectors are also No-Scoop.

Because Series 1 and Series 2 connectors have different shell position keying (page 11) there is no possibility of intermating the two constructions.

Order 3X, 5X, and 7X Series 1 when you have possible blind-mating or critical systems applications. Order 4X, 6X and 8X Series 2 every other time.

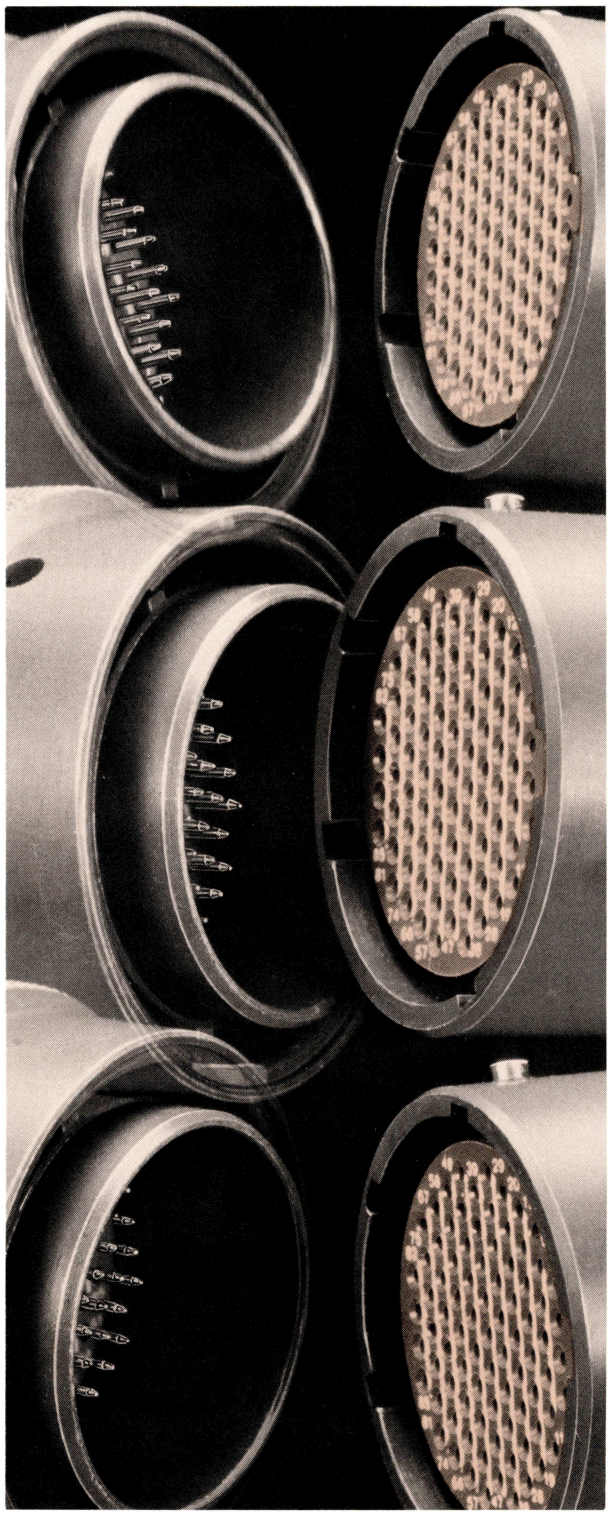

DESIGN FEATURES—CIRCULAR CONNECTORS

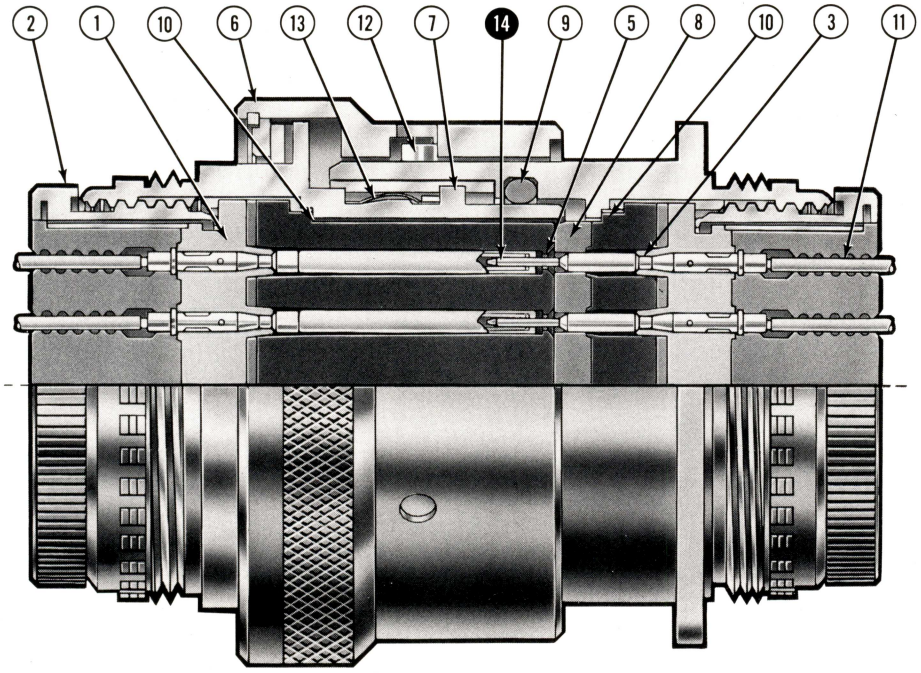

Series 1 Construction

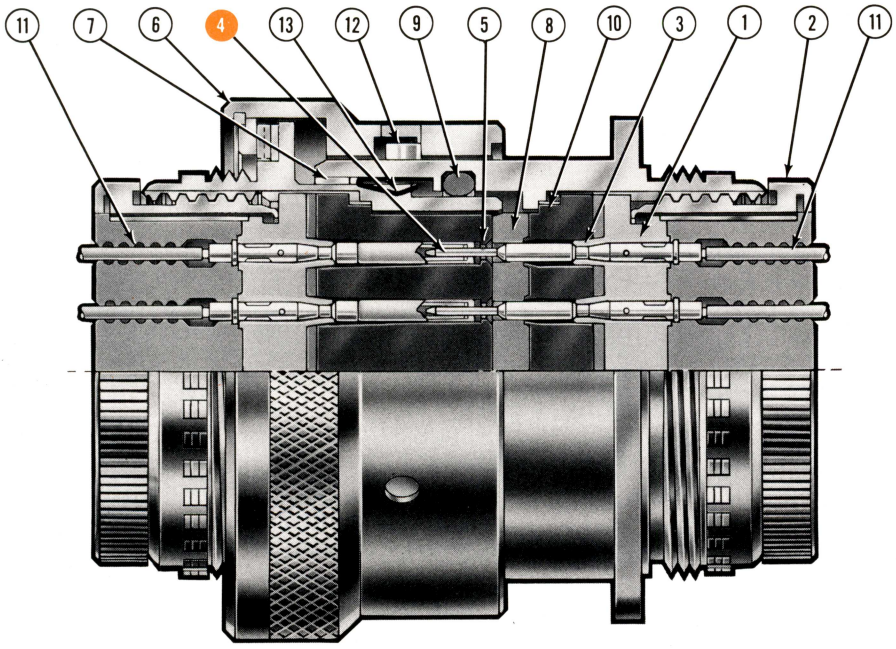

Series 2 Construction

(1) Molded One-Piece Contact Retention Disc.

(2) Captivated Rear-Locking Nut. (Metal to Metal Bottoming)

(3) Individual Contact Risers.

(4) Anti-Scoop Recessed Pin Contacts (in receptacle).

(5) Closed Entry Socket Insert and Contacts.

(6) Captivated Triple Bayonet Coupling System.

(7) 5 Key Shell Polarization. (Series 2 size 8 has 2 keys.)

(8) Interfacial Mating Seal.

(9) Dynamic "O" Ring Peripheral Shell Ring.

(10) Monoblock Construction—Inserts Bonded to Shells.

(11) Self-Sealing Rear Grommets.

(12) Visual Mating Indicator.

(13) Shell to Shell Grounding Fingers.

(14) Anti-Scoop Recessed Pin Contacts (in Plug and Receptacle).

(15) Connectors will accommodate 1/8" (.375 to .500) variation in gap between mounting surfaces.

(16) Connectors will accommodate radial misalignment of up to .031—(.062 total float).

(17) Conical float spring maintains interfacial seal.

(18) 2 Key Shell polarization.

DESIGN FEATURES—RACK & PANEL CONNECTORS

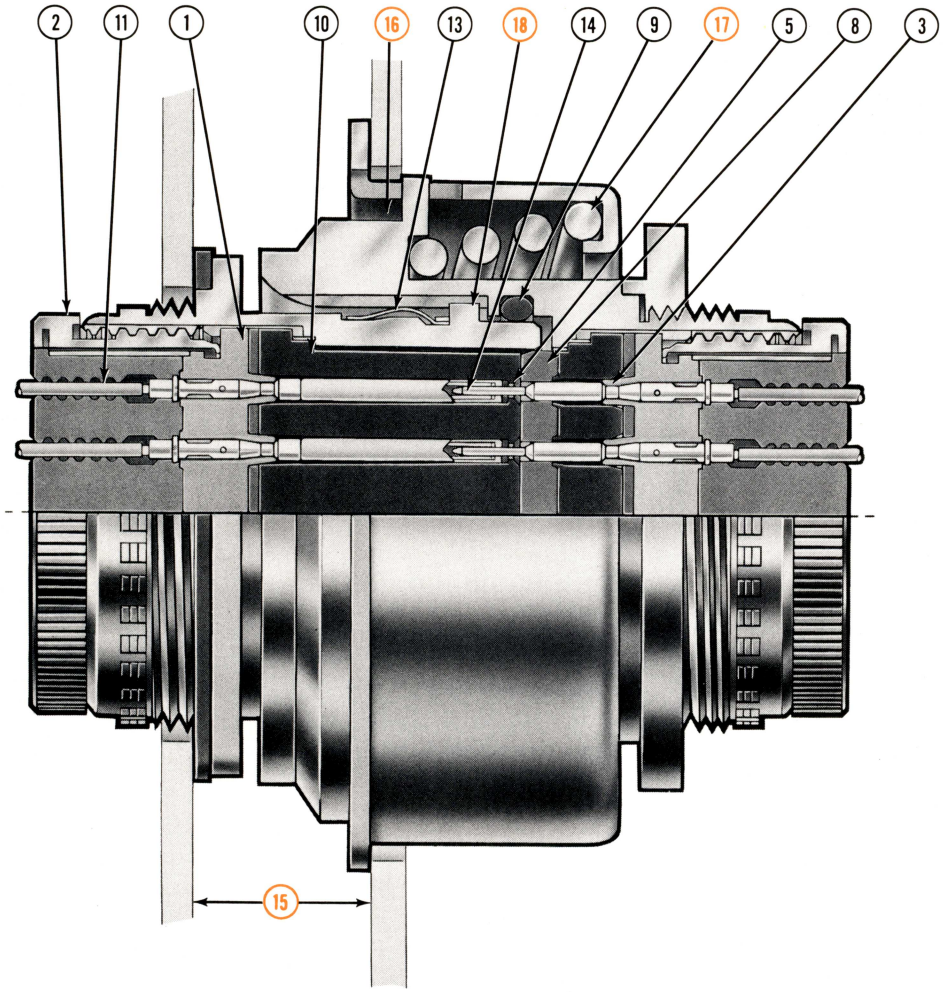

ASTRO/348 Rack and Panel Connectors maintain environmental performance of standard circular Astro/348, and employ Astro/348 insert arrangements, contacts, service tools and accessory hardware.

ASTRO/348 Rack & Panel connectors have been fully designed and developed. Contact factory for production schedules and delivery information.

GROUNDING FINGERS

Shell-to-shell grounding is established by beryllium spring fingers permanently fixed to the Series 2 receptacle shell and permanently fixed to the Series 1 plug shell. These spring fingers, spaced at a minimum of 6 per inch (except at key-ways in Series 2 construction), make contact at least .090 inch before pin-socket electrical engagement occurs during mating and maintain contact at least .090 inch after pin-socket disengagement during unmating.

Series 2

Series 1

SHELL CONSTRUCTIONS SERIES 2

Plug
348-46EXX-XX

Single Hole Mtg. Receptacle
348-43EXX-XX

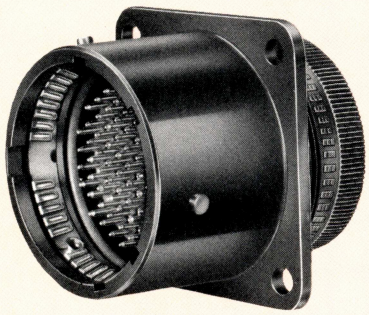

Square Flange Receptacle
348-40EXX-XX

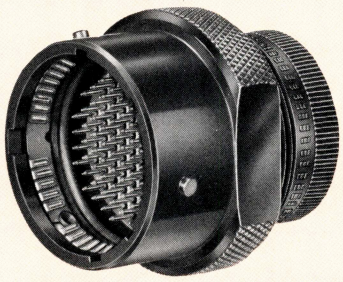

Cable Receptacle
348-41EXX-XX

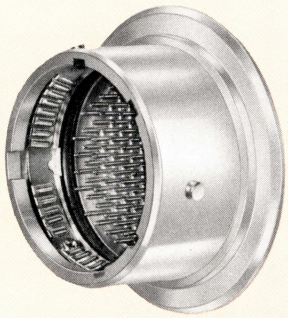

Hermetic Seal—Solder Flange Receptacle
348-25HXX-XXP

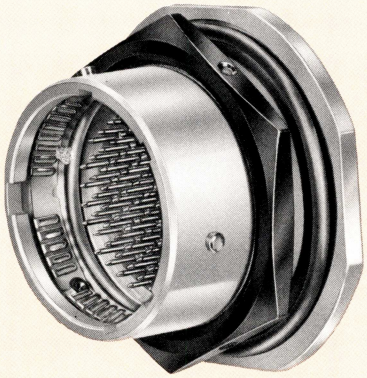

Hermetic Seal—Receptacle Single Hole Mtg.
348-23HXX-XXP

SHELL CONSTRUCTIONS SERIES

Plug
348-36EXX-XX

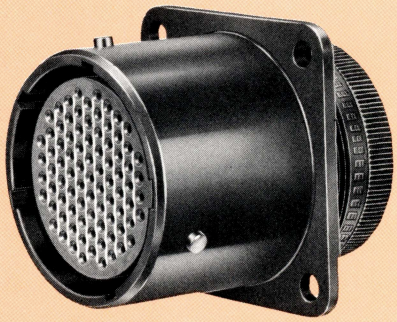

Square Flange Receptacle
348-30EXX-XX

SHELL CONSTRUCTIONS SERIES 1

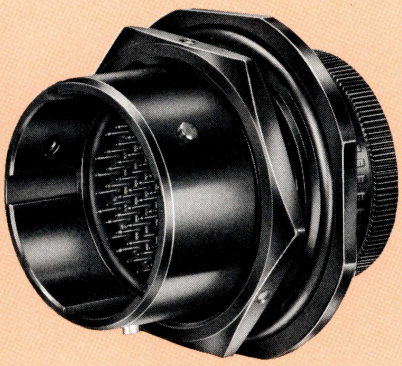

Single Hole Mtg. Receptacle
348-33EXX-XX

Cable Receptacle
348-31EXX-XX

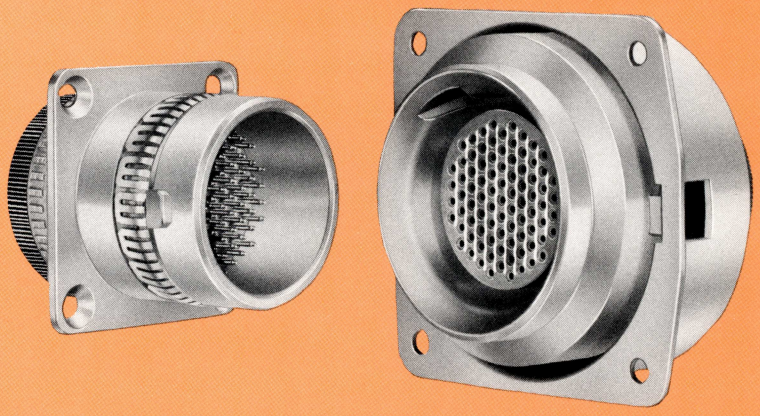

348 Series Type Rack and Panel Connector

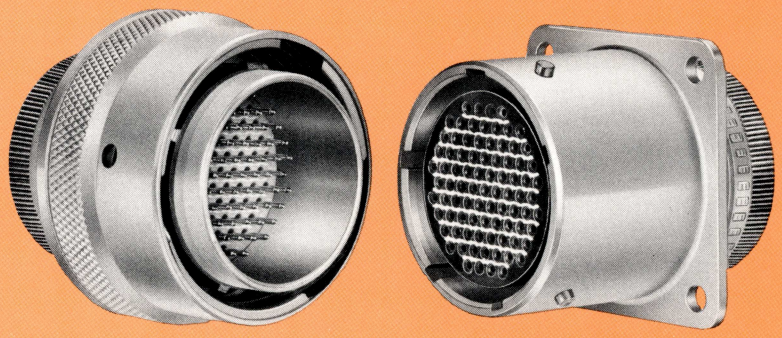

348 Series High Temperature Connector (200°C)

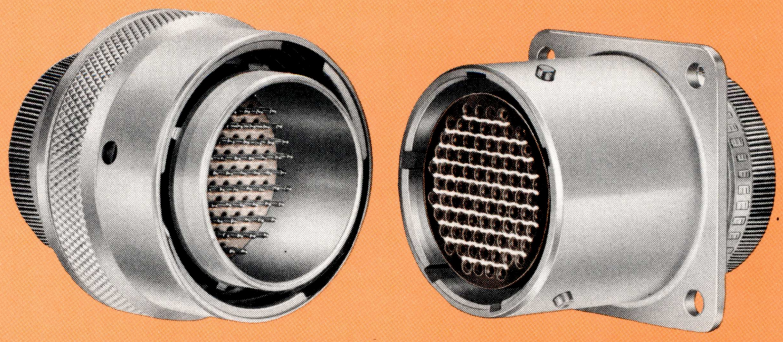

348 Series Fluid Resistant Connector (175°C)

SHELL DIMENSIONS (inches) All dimensions are shown as MAX.

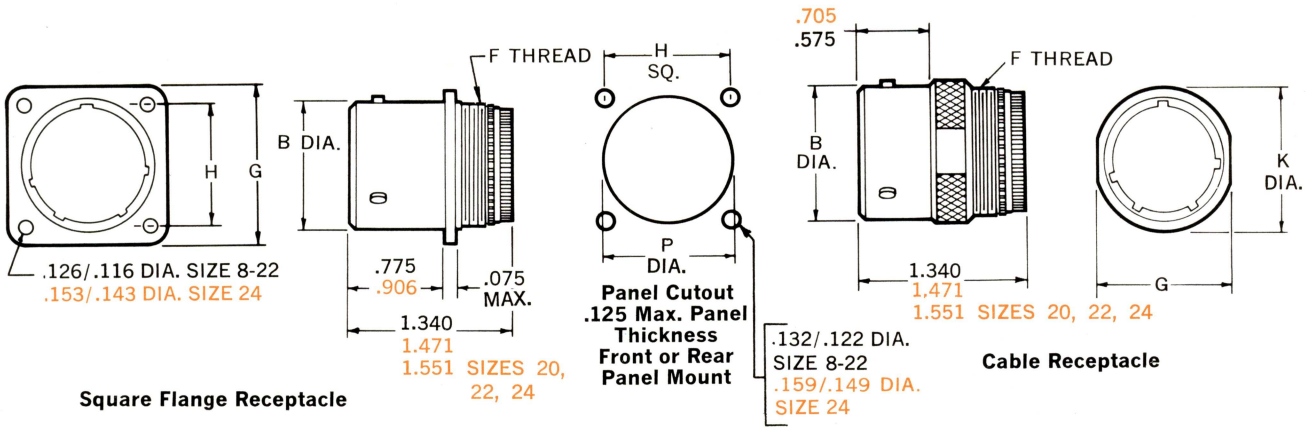

Square Flange Receptacle

Cable Receptacle

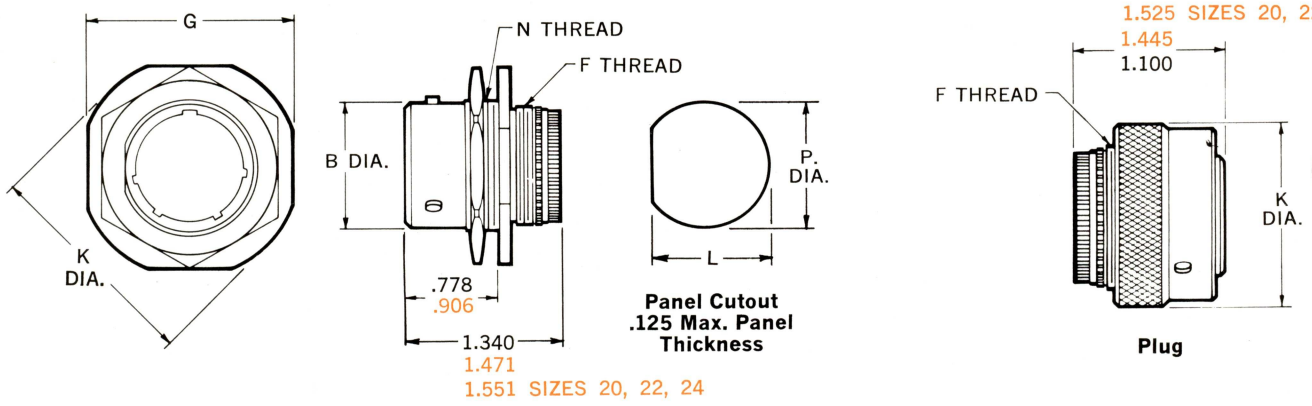

Single Hole Mounting Receptacle

Plug

Orange figures indicate Series 1-Long 100% No-Scoop Design.

Dimension	SHELL SIZE						
	8-Standard Series 2	8-Long Series 1	10-Standard Series 2	10-Long Series 1	14-Standard Series 2	14-Long Series 1	16-Standard Series 2
B Dia. Max.	.553	.553	.678	.678	.928	.928	1.054
F Thread	1/2-28	1/2-28	5/8-28	5/8-28	7/8-28	7/8-28	1-28
G Max. Sq. Flange Recept.	.820	.820	.945	.945	1.133	1.133	1.258
G Max. Cable Recept. Flats	.565	.565	.690	.690	.940	940	1.066
G Max. Single Hole Mtg. Recept.	.989	.989	1.114	1.114	1.401	1.401	1.526
H ±. 005	.594	.594	.719	.719	.906	.906	.969
K Dia. Max. Cable Recept.	.780	.780	.900	.900	1.150	1.150	1.280
K Dia. Max. Single Hole Mtg. Recept.	1.072	1.072	1.197	1.197	1.510	1.510	1.635
K Dia. Max. Plug	.850	.850	.975	.975	1.225	1.225	1.350
K Dia. Max. Herm. Seal Solder Flange Recept.	.945	.945	1.070	1.070	1.320	1.320	1.446
L ± .005	.605	.605	.730	.730	.980	.980	1.105
N Thread	5/8-20	5/8-20	3/4-20	3/4-20	1-20	1-20	1 1/8-20
P Dia. ±.005	.635	.635	.760	.760	1.010	1.010	1.135
Q Max.	.710	.843	.710	.843	.710	.843	.710
R Dia. ±.005	.661	.661	.786	.786	1.036	1.036	1.162

N.A. — Hermetics available only in Standard Sizes 8 through 18, Long Size 24

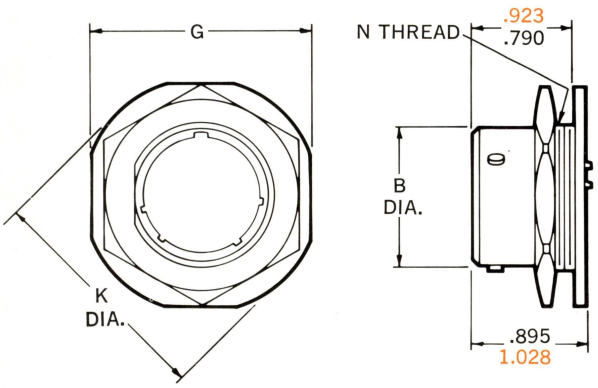

Hermetic Seal Single Hole Mounting Receptacle

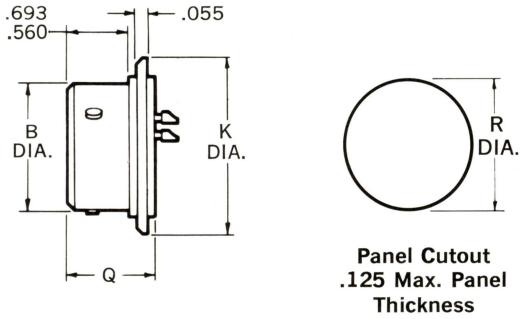

Hermetic Seal Solder Flange Receptacle

Panel Cutout .125 Max. Panel Thickness

MATED CONNECTORS DIMENSIONS (inches)

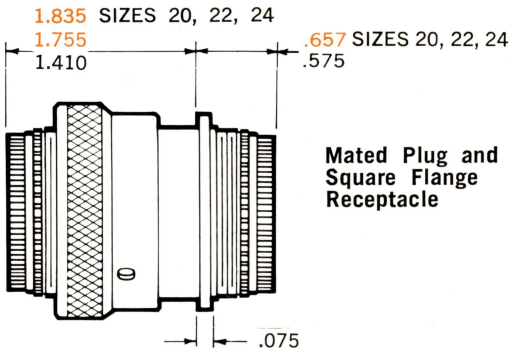

Mated Plug and Square Flange Receptacle

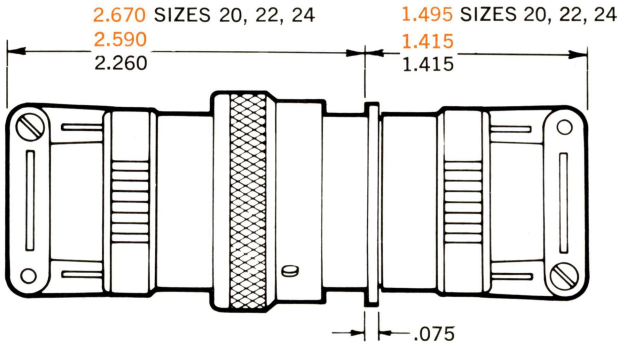

Mated Plug and Square Flange Receptacle with Cable Support.

Orange figures indicate Series 1-Long 100% No-Scoop Design.

SHELL SIZE						Dimension
16-Long Series 1	18-Standard Series 2	18-Long Series 1	20-Long Series 1	22-Long Series 1	24-Long Series 1	
1.054	1.178	1.178	1.303	1.428	1.553	B Dia. Max.
1-28	1⅛-28	1⅛-28	1¼-28	1⅜-28	1½-28	F Thread
1.258	1.351	1.351	1.475	1.570	1.711	G Max. Sq. Flange Recept.
1.066	1.190	1.190	1.315	1.440	1.565	G Max. Cable Recept. Flats
1.526	1.651	1.651	1.776	1.901	2.026	G Single Hole Mtg. Recept. & Herm. Seal "D" Hole Recept.
.969	1.062	1.062	1.156	1.250	1.375	H ±. 005
1.280	1.400	1.400	1.525	1.650	1.775	K Dia. Max. Cable Recept.
1.635	1.745	1.745	1.870	1.995	2.120	K Dia. Max. Single Hole Mtg. Recept. & Herm. Seal Single Hole
1.350	1.475	1.475	1.624	1.749	1.874	K Dia. Max. Plug
1.446	1.570	1.570	1.816	1.941	2.066	K Dia. Max. Herm. Seal Solder Flange Recept.
1.105	1.230	1.230	1.355	1.480	1.605	L ± .005
1⅛-20	1¼-20	1¼-20	1⅜-20	1½-20	1⅝-20	N Thread
1.135	1.260	1.260	1.385	1.510	1.635	P Dia. ±.005
.843	.740	.873	.903	.903	.903	Q Max.
1.162	1.286	1.286	1.411	1.536	1.661	R Dia. ±.005

Orange figures indicate Series 1-Long 100% No-Scoop Design.

CONTACTS

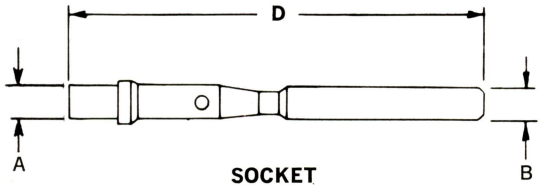

SOCKET

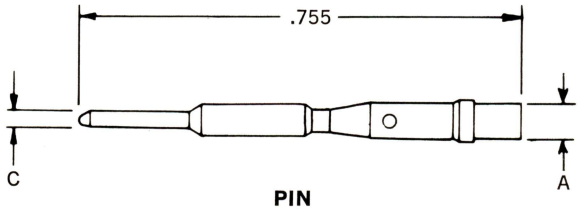

PIN

DIMENSIONS

Size	A. Max.		B Max.		C Max.		D Ref.		Current Rating
	Series 2	Series 1	Series 2	Series 1	Series 2	Series 1	Series 2	Series 1	
23-22	.050	.050	.051	.051	.028	.028	.718	1.048	5.0 Amps
23-28	.050	.050	.051	.051	.028	.028	.718	1.048	1.5 Amps
20-20	.078	.078	.078	.078	.041	.041	.718	1.048	7.5 Amps
16-16	.103	.103	.113	.113	.063	.063	.718	1.048	13.0 Amps
12-12	.158	.158	.161	.161	.095	.095	.718	1.048	23.0 Amps

Orange figures indicate Series 1 (100% No-Scoop) Design.

TABLE OF POWER CONTACTS:

Contact Size		Wire Size Accommodations	Cinch-Nuline Part Number		MS Part Number	
			Socket	Pin	Socket	Pin
23-22	SERIES 2	#22, #24, #26	348-100-2201S-02	348-100-2202P-02	MS90460A23-22	MS90461A23-22
23-28		#28, #30, #32	348-100-5047S-02	348-100-5047P-02	MS90460A23-28	MS90461A23-28
20-20		#20, #22, #24	348-100-2000S-02	348-100-2000P-02	MS90460A20-20	MS90461A20-20
16-16		#16, #18, #20	348-100-1600S-02	348-100-1600P-02	MS90460A16-16	MS90461A16-16
12-12		#12, #14	348-100-1200S-02	348-100-1200P-02	MS90460A12-12	MS90461A12-12
23-22	SERIES 1	#22, #24, #26	348-100-2203S-02	348-100-2202P-02	MS3343A23-22	MS90461A23-22
23-28		#28, #30, #32	348-100-5048S-02	348-100-5047P-02	MS3343A23-28	MS90461A23-28
20-20		#20, #22, #24	348-100-2003S-02	348-100-2000P-02	MS3343A20-20	MS90461A20-20
16-16		#16, #18, #20	348-100-1603S-02	348-100-1600P-02	MS3343A16-16	MS90461A16-16
12-12		#12, #14	348-100-1203S-02	348-100-1200P-02	MS3343A12-12	MS90461A12-12

Orange figures indicate Series 1 (100% No-Scoop) Design.

FOR CONTACT FINISHES:
"A" 150° C. MS rating, use Cinch-Nuline P/N with -02 (see table).
"B" 200° C. MS rating, use Cinch-Nuline P/N with -03.
EXAMPLE: MS90460B23-22 is equivalent to 348-100-2201S-03.

TABLE OF THERMOCOUPLE CONTACTS:

Contact Size		Material	Wire Size	Cinch-Nuline Part Number	
				Socket	Pin
20-20	SERIES 2	LEADED COPPER	#20, #22, #24	348-100-5014S	348-100-5014P
	SERIES 1			348-100-5019S	348-100-5014P
	SERIES 2	ALUMEL		348-100-5015S	348-100-5015P
	SERIES 1			348-100-5020S	348-100-5015P
	SERIES 2	CHROMEL		348-100-5016S	348-100-5016P
	SERIES 1			348-100-5021S	348-100-5016P
	SERIES 2	IRON		348-100-5017S	348-100-5017P
	SERIES 1			348-100-5022S	348-100-5017P
	SERIES 2	CONSTANTAN		348-100-5018S	348-100-5018P
	SERIES 1			348-100-5023S	348-100-5018P

Orange figures indicate Series 1 (100% No-Scoop) Design.

SHIELDED CONTACTS

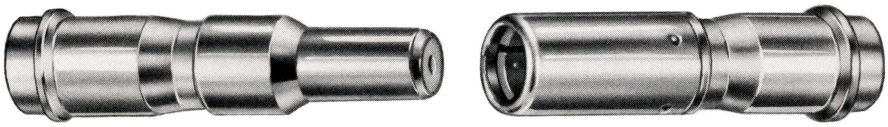

TABLE OF SHIELDED CONTACTS:

Contact Size		Cable* Accommodation	Cinch-Nuline Part Number		MS Part Number	
			Socket	Pin	Socket	Pin
16	SERIES 2	RG-178A/U RG-196A/U	348-100-6010S-02	348-100-6010P-02	N/A	N/A
	SERIES 1		348-100-6011S-02	348-100-6010P-02	N/A	N/A
16	SERIES 2	REVERE WH-95623	348-100-6014S-02	348-100-6014P-02	N/A	N/A
	SERIES 1		348-100-6015S-02	348-100-6014P-02	N/A	N/A
12	SERIES 2	RG-187A/U RG-188A/U RG-179B/U	348-100-6000S-02	348-100-6000P-02	N/A	N/A
	SERIES 1		348-100-6005S-02	348-100-6000P-02	N/A	N/A
12	SERIES 2	RAYCHEM 48-950	348-100-6001S-02	348-100-6001P-02	N/A	N/A
	SERIES 1		348-100-6006S-02	348-100-6001P-02	N/A	N/A
12	SERIES 2	RG-180B/U RG-195A/U MICRODOT 293-3922	348-100-6002S-02	348-100-6002P-02	N/A	N/A
	SERIES 1		348-100-6007S-02	348-100-6002P-02	N/A	N/A
12	SERIES 2	MICRODOT 250-4070	348-100-6003S-02	348-100-6003P-02	N/A	N/A
	SERIES 1		348-100-6008S-02	348-100-6003P-02	N/A	N/A
12	SERIES 2	RAYCHEM 48-502	348-100-6004S-02	348-100-6004P-02	N/A	N/A
	SERIES 1		348-100-6009S-02	348-100-6004P-02	N/A	N/A
12	SERIES 2	REVERE WH-95623	348-100-6013S-02	348-100-6012P-02	N/A	N/A
	SERIES 1		348-100-6012S-02	348-100-6012P-02	N/A	N/A

*Cables shown are typical for that contact pin. Consult factory for contact section if your cable requirements are not shown.

Orange figures indicate Series 1 (100% No-Scoop) Design.

WIRE RANGE ACCOMMODATIONS:

Wire Barrel Size	Wire Size	OD of finished Wire, (Inch) 1/		Oversize Wire 2/	Wire Number (reference) 3/
28	32	0.030 min	.042 nominal	0.064 max	MIL-W-16878
	30				
	28	0.054 max			
22	26	0.030 min	.042 nominal	0.064 max	MS21985
	24				MIL-W-81381
	22	0.054 max			MIL-W-16878
20	24	0.041 min	.062 nominal		MS21985
	22				MS21985
	20	0.081 max		0.085 max	MIL-W-81044
16	18	0.066 min	.083 nominal	0.109 max	MS21985
	16	0.101 max			MIL-W-81044
12	14	0.097 min	.126 nominal	0.170 max	MS18113
	12	0.155 max			MIL-W-81044

1/ All contacts may be assembled with either minimum or maximum diameter wire as shown or in any combination thereof. When using groupings of oversize wire, they shall be randomly distributed.

2/ 50 percent of the contacts in a given insert arrangement may be assembled with oversize wire up to and including the maximum diameter shown; however, the remaining 50 percent shall not exceed the nominal finished wire diameter nor shall they be less than the minimum finished wire diameters.

3/ Wire numbers are for reference only and are not intended to restrict the use of acceptable wire-types with these connectors.

INSERT ARRANGEMENTS

AO1*
8-04
4 #23-22
CONTACTS

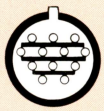

BO1*
10-12
12 #23-22
CONTACTS

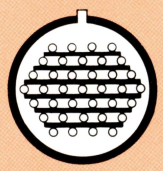

DO1*
14-37
37 #23-22
CONTACTS

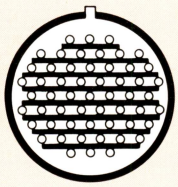

EO1*
16-55
55 #23-22
CONTACTS

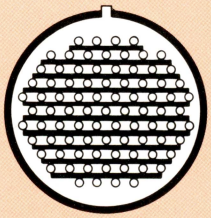

FO1*
18-85
85 #23-22 CONTACTS

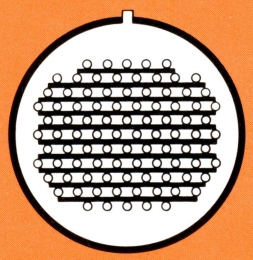

GO1*
20-92
92 #23-22 CONTACTS

BO2*
10-05
5 #20-20
CONTACTS

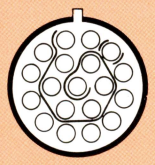

DO2*
14-19
19 #20-20
CONTACTS

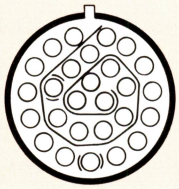

EO2*
16-27
27 #20-20
CONTACTS

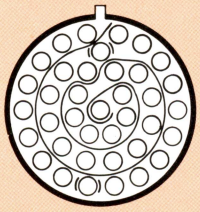

FO2*
18-38
38 #20-20 CONTACTS

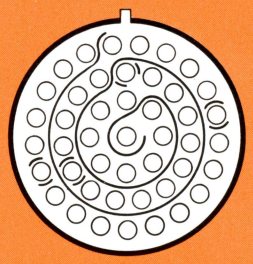

GO2*
20-45
45 #20-20 CONTACTS

BO3*
10-03
3 #16-16
CONTACTS

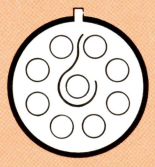

DO3*
14-09
9 #16-16
CONTACTS

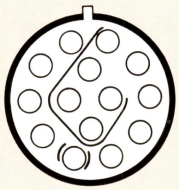

EO3*
16-14
14 #16-16
CONTACTS

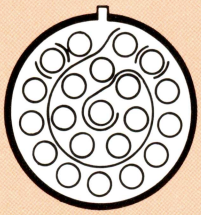

FO3*
18-21
21 #16-16 CONTACTS

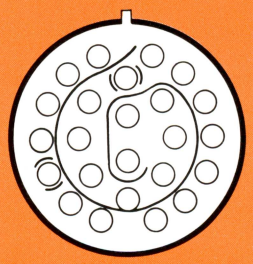

GO3*
20-24
24 #16-16 CONTACTS

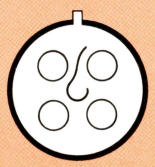

DO4*
14-04
4 #12-12
CONTACTS

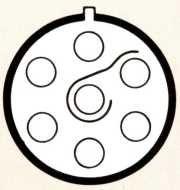

EO4*
16-07
7 #12-12
CONTACTS

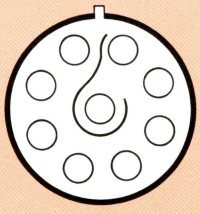

FO4*
18-09
9 #12-12 CONTACTS

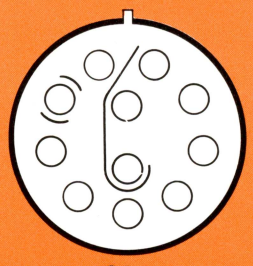

GO4*
20-11
11 #12-12 CONTACTS

Note: Front face of pin insert shown. *—Military Designation for Shell and Insert Arrangement.

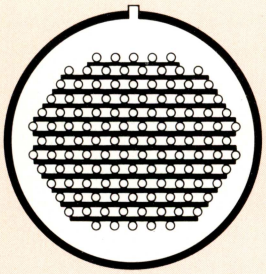

HO1*
22-121
121 #23-22 CONTACTS

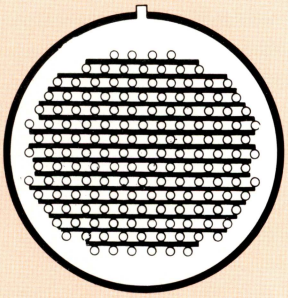

JO1*
24-155
155 #23-22 CONTACTS

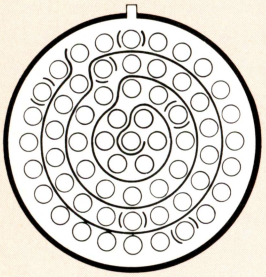

HO2*
22-61
61 #20-20 CONTACTS

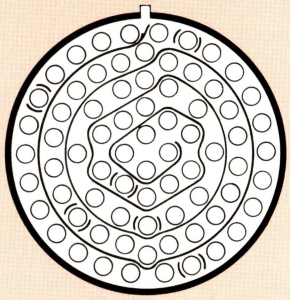

JO2*
24-74
74 #20-20 CONTACTS

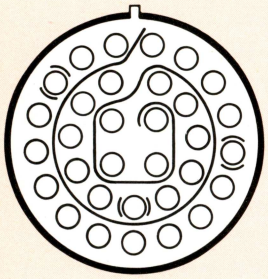

HO3*
22-32
32 #16-16 CONTACTS

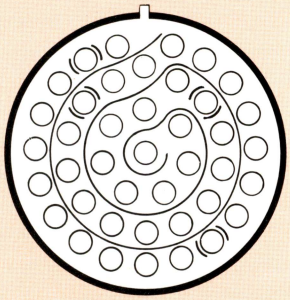

JO3*
24-41
41 #16-16 CONTACTS

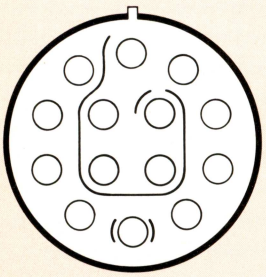

HO4*
22-14
14 #12-12 CONTACTS

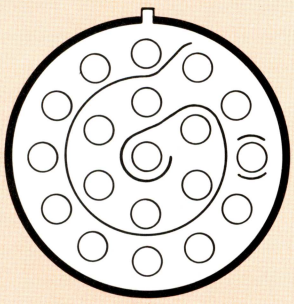

JO4*
24-19
19 #12-12 CONTACTS

ALTERNATE SHELL POSITIONS

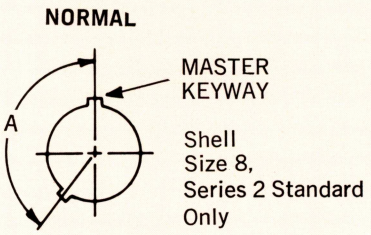

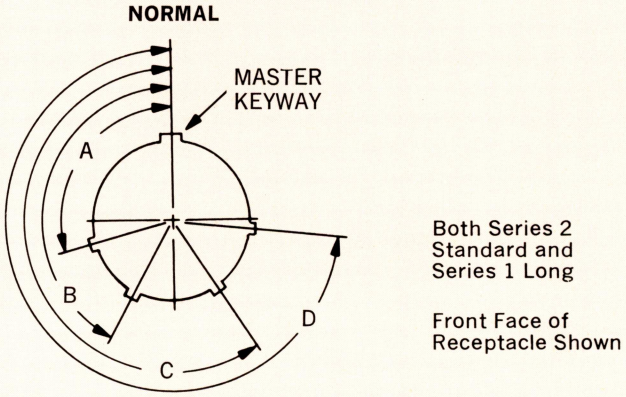

STANDARD—SERIES 2

Key and Keyway Arrangement	Angular Location								
	Shell Size 8	Shell Sizes 10 and 14				Shell Sizes 16 and 18			
	A	A	B	C	D	A	B	C	D
1	128°	105°	140°	215°	265°	105°	140°	215°	265°
2	190°	102°	132°	248°	320°	18°	149°	192°	259°
3	205°	80°	118°	230°	312°	92°	152°	222°	342°
4	220°	35°	140°	205°	275°	84°	152°	204°	334°
5	235°	64°	155°	235°	304°	24°	135°	199°	240°
6	250°	35°	115°	220°	270°	98°	152°	268°	338°

LONG—SERIES 1

Key and Keyway Arrangement	Angular Location											
	Shell Size 8				Shell Sizes 10 and 14				Shell Sizes 16, 18, 20, 22, 24			
	A	B	C	D	A	B	C	D	A	B	C	D
1	105°	140°	215°	265°	95°	141°	208°	236°	80°	142°	196°	293°
2	102°	132°	248°	320°	113°	156°	182°	292°	135°	170°	200°	310°
3	80°	118°	230°	312°	90°	145°	195°	252°	49°	169°	200°	244°
4	35°	140°	205°	275°	53°	156°	220°	255°	66°	140°	200°	257°
5	64°	155°	234°	304°	119°	146°	176°	298°	62°	145°	180°	280°
6	91°	131°	197°	240°	51°	141°	184°	242°	79°	153°	197°	272°

THE STANDARD CONNECTOR FAMILY FOR THE NEXT DECADE

HOW TO ORDER ASTRO/348 CONNECTORS

To get the specific Astro/348 connector you want, put together the part number as per the following example.

348-30E18-85P1(200)

SERIES DESIGNATION

CONNECTOR TYPE

150° C. Oper. Temp.
3-Series 1 Connector
4-Series 2 Connector

200° C. Oper. Temp.
5-Series 1 Connector
6-Series 2 Connector

High Fluid Resistance
7-Series 1 Connector
8-Series 2 Connector
175° C. oper. temp.

0—Square Flange Receptacle
1—Cable Receptacle
3—Single Hole Mtg. Receptacle
5—Solder Flange Receptacle (Hermetic only)
6—Straight Plug

CLASS
E—Environmental
H—Hermetic (solder cap contacts)
P—Potting seal

SHELL SIZE
08 10 14 16 18 20* 22* 24*
*Available only in Series 1—Long

Omit if no cable clamp is desired.
(200)—Connector with cable clamp.
(201)—Connector less contacts.
(207)—Connector with Fluorosilicone rubber seals and insert, Connector Types 3 and 4 only.

ALTERNATE SHELL POSITIONS
1 NORMAL
2
3
4
5
6
As per table on page 11.

CONTACT STYLE
P—Pin S—Socket

INSERT ARRANGEMENT
03 04 05 07 09 11 12 14 19 21 24
27 32 37 38 41 45 55 61 74 85 92
121 (01)* 155 (01)*

MILITARY STANDARD PART NUMBER FOR REV. "B" CONNECTORS

MIL-C-81511, Revision B connectors can be ordered by the Military part numbers. The connector part number is put together as per the following example:

M81511/01E18-85P1

SPECIFICATION NUMBER

SHELL STYLE
/01 Square Flange Receptacle—Series 2—Standard
/02 Solder Flange Receptacle, Hermetic—Series 2—Std.
/03 Single Hole Mtg. Receptacle—Series 2—Standard
/04 Single Hole Mtg. Receptacle, Hermetic—Series 2—Std.
/05 Cable Receptacle—Series 2—Standard
/06 Straight Plug—Series 2—Standard
/21 Square Flange Receptacle—Series 1—Long
/22 Solder Flange Receptacle, Hermetic—Series 1—Long
/23 Single Hole Mtg. Receptacle—Series 1—Long
/24 Single Hole Mtg. Receptacle, Hermetic—Series 1—Long
/25 Cable Receptacle—Series 1—Long
/26 Straight Plug—Series 1—Long

ALTERNATE SHELL POSITIONS
1, 2, 3, 4, 5, 6
As per table on page 11.

CONTACT STYLE
P—Pin S—Socket

INSERT ARRANGEMENT
03 04 05 07 09 11 12 14 19 21 24
27 32 37 38 41 45 55 61 74 85 92
121 (01)* 155 (01)*

SHELL SIZE
08 10 14 16 18 20* 22* 24*
*Available only in Series 1—Long

CLASS
E—Environmental
H—Hermetic
P—Potted

*121 and 155 contact inserts are marked "01" see pages 10 and 11

MILITARY STANDARD PART NUMBER FORMAT FOR REV. "C" CONNECTORS

Note: Under Rev. "C" of MIL-C-81511, the part numbering system has been revised to a 15 digit system to be in conformance with Defence Standardization Manual 4120-3-M.

The connector part number is put together as per the following example:

M81511/01EF01P1

SPECIFICATION NUMBER

SHELL STYLE

SERIES 2 CONNECTORS

/01 Square Flange Recept.
/02 Solder Flange Recept. Hermetic
/03 Single Hole Mtg. Recept.
/04 Single Hole Mtg. Recept., Hermetic
/05 Cable Receptacle
/06 Straight Plug
/28 Single Hole Mtg. Recept., Bulkhead Feed thru contacts, Hermetic
/31 Square Flange Recept., Potting Seal
/32 Single Hole Mtg. Recept., Potting Seal
/33 Cable Receptacle, Potting Seal
/34 Straight Plug, Potting Seal

SERIES 1 CONNECTORS

/21 Square Flange Recept.
/22 Solder Flange Recept., Hermetic
/23 Single Hole Mtg. Recept.
/24 Single Hole Mtg. Recept., Hermetic
/25 Cable Receptacle
/26 Straight Plug
/27 Single Hole Mtg. Recept., Bulkhead Feed thru contacts, Hermetic
/35 Square Flange Recept., Potting Seal
/36 Single Hole Mtg. Recept., Potting Seal
/37 Cable Receptacle, Potting Seal
/38 Straight Plug, Potting Seal

ALTERNATE SHELL POSITIONS

1, 2, 3, 4, 5, 6
As per table on page 11.

CONTACT

P—Pin S—Socket C—Feed through contact

INSERT ARRANGEMENT

Code numbers coordinated with insert arrangements pages 10 and 11.
Example: F01 is 18-85 insert.

SHELL SIZE

8	10	14	16	18	20	22	24
A	B	D	E	F	G	H	J

CLASS

E—Grommet Seal Connectors (150° C. oper. temp.)
F—Grommet Seal Connectors (175° C. oper. temp.)
A—Grommet Seal Connectors (200° C. oper. temp.)
H—Hermetic Seal Connectors (150° C. oper. temp.)
G—Hermetic Seal Connectors (175° C. oper. temp.)
B—Hermetic Seal Connectors (200° C. oper. temp.)
P—Potting Seal Connectors (150° C. oper. temp.)
T—Potting Seal Connectors (175° C. oper. temp.)
C—Potting Seal Connectors (200° C. oper. temp.)

PERFORMANCE CHARACTERISTICS—TESTS/REQUIREMENTS AND PROCEDURES

MAINTENANCE AGING—All contacts shall be removed and installed for 10 cycles. After 10th cycle, contact insertion and retention forces are as shown in table:

Contact Size	UNLOCKED			LOCKED
	Insertion Force Lbs. Maximum	Removal Force Lbs.		Retention Force Lbs. Minimum
		Minimum	Maximum	
23-22	12	4	15	10
23-28	12	4	15	10
20-20	20	6	15	15
16-16	25	6	15	25
12-12	30	6	15	25

DURABILITY—After 500 mating-unmating cycles at a maximum rate of 300 cycles per hour, connectors shall not show any damage detrimental to the operation of the connector.

CORROSION—After salt-spray testing per method 1001, condition B, MIL-STD-1344 connectors shall show no exposure of basis metal which will affect performance.

FLUID IMMERSION—Unmated connectors shall be immersed fully in the fluids specified in table. At least one connector must be immersed in each fluid type. After the immersion period and a drying period of 1 hr., the connectors must remain completely functional.

Fluids for fluid immersion

Connector Class	Fluids
A, B, C, E, H, and P	MIL-H-5606 MIL-L-23699
F, G, and T	MIL-L-7808 MIL-L-23699 MIL-H-5606 MIL-T-5624 (JP-5) Glycol Alkaline cleaning solution pH10-12 Coolant, Dielectric Fluid, Synthetic Silicate Ester Base

DIELECTRIC WITHSTANDING VOLTAGE—Connectors shall show no evidence of breakdown or flashover when subjected to the test voltages and altitudes specified in table, corona shall not be considered as breakdown. (Sea level tests performed per method 3001 of MIL-STD-1344; Altitude tests are per method 105, condition C, of MIL-STD-202.)

Test voltage (ac, rms, not working voltage)

Simulated Altitude Condition	Service Rating I		*Service Rating II	
	Mated	Unmated	Mated	Unmated
Sea level	1800	1500	2300	2300
50,000 feet	1000	700	1500	800
70,000 feet	1000	375	1500	500
110,000 feet	1000	200	1500	200

Maximum recommended working voltage, ac, rms

Condition	Service Rating I	* Service Rating II
Sea level	600	1000
50,000 feet	300	450
70,000 feet	300	450
110,000 feet	300	450

*Service Rating II applies only to connectors using 12 and 16 size contacts.

MOISTURE RESISTANCE—Mated connectors shall have an insulation resistance of 500 megohms or greater at 25°C. after moisture testing per MIL-STD-202, method 106.

ALTITUDE IMMERSION—Connectors shall have a minimum insulation resistance of 5000 megohms after being subjected to altitude immersion testing as follows: mated connectors shall be immersed in 30°C. water and salt (5%), placed in an altitude chamber, and the pressure reduced to approximately 1.2 inches of mercury, 70,000 ft., then raised to atmospheric pressure. This cycle shall be repeated three times. Test voltages shall be applied with connectors immersed but at sea level pressure.

THERMAL SHOCK—Connectors shall remain completely functional after being subjected to the temperature extremes specified below. (Tested in accordance with method 1003, of MIL-STD-1344 per test conditions* listed.)

Temperature Extremes

Low Temperature All Classes	High Temperature		
	Class E, H, and P	Class F, G, and T	Class A, B, and C
$-65\ ^{+0^\circ}_{-3^\circ}$ C	$+150\ ^{+3^\circ}_{-0^\circ}$ C	$+175\ ^{+3^\circ}_{-0^\circ}$ C	$+200\ ^{+3^\circ}_{-0^\circ}$ C
*Test Condition	F	F @175 C.	C

VIBRATION—Connectors shall undergo vibration testing per method 2005, test condition IV, MIL-STD-1344 in low and high temp. extremes of preceding table with all contacts connected in series, and a current flow of 100 milliamperes. There shall be no circuit interruption longer than 1 microsecond.

PHYSICAL SHOCK—The application of ½ sine-wave transient shock impulses of 50 gravity units to 3 planes for 11 milliseconds, with test voltage applied to series connected contacts, shall result in no discontinuity longer than 1 microsecond. Connectors shall not be damaged, parts shall not become loose.

TEMPERATURE LIFE—Mated connectors shall perform satisfactorily after being subjected to ambient temperatures specified below, per class for 1000 hrs.

High Temperature		
Class E, H, and P	Class F, G, and T	Class A, B, and C
$+150\ ^{+3^\circ}_{-0^\circ}$ C	$+175\ ^{+3^\circ}_{-0^\circ}$ C	$+200\ ^{+3^\circ}_{-0^\circ}$ C

EMI SHIELDING EFFECTIVENESS—As measured in a tri-axial EMI leakage tester, connector shells with grounding springs shall exhibit a radio frequency attenuation equal to or greater than the following:

Frequency (MHz)	Leakage Atten. (db)
100	65
300	55
800	45
1000	45

MATERIALS AND FINISHES

PIN CONTACT (STANDARD CONTACT)	Copper Base Alloy Gold Plated per MIL-G-45204 over Copper Underplate.
SOCKET CONTACT (STANDARD CONTACT)	Copper Base Alloy Gold Plated per MIL-G-45204 over Copper Underplate. Hood material is stainless steel.

SHELLS

Aluminm Alloy 6061 Temper T6 per QQ-A-367 and 6262 Temper T9 per QQ-A-225/10

Connector Class	Finish
E & P	Cadmium plate over nickel; followed by olive drab chromate per QQ-P-416 Type II
F, A, T & C	Dull chrome plate over nickel.

COUPLING RING	Aluminum Alloy 7075-T6 per QQ-A-282. For finish of coupling ring see above table.
REAR BOTTOMING RING	Aluminum Alloy 6061 Temper T3 Per QQ-H-225/3C.
REAR NUT	Stainless steel type 303 passivated.
RETENTION DISC	Minnesota Mining & Manufacturing Polyarylsulfone per MIL-P-46133.
GROMMETS, SEALS, AND "O" RINGS	Cinch-Nuline proprietary Silicone & Fluorosilcone Elastomers.
CABLE CLAMPS	Aluminum Die Cast Alloy per QQ-A-591. Cable Clamps finishes same as shells.
GROUNDING SPRING	Berylium Copper per QQ-533. Cadmium plated per QQ-P-416 Type II clear chromate coating for "E" & "P" Class Connectors. Nickel Plated "F," "A," "T," & "C" Class Connectors.
BAYONET RIVETS	Stainless Steel Type 316 passivated.
INSERTS	Diallyl Phthalate per MIL-M-14F Type SDG-F for Class "E" & "P" Connectors. Reinforced Epoxy Compound for Class "F", "A", "T", & "C" Connectors.
HERMETIC SHELLS	Ferrous Alloy Tin plated per MIL-T-10727.
HERMETIC CONTACTS	Ferrous Alloy Gold plated per MIL-G-45204.

POTTING

Astro/348 connectors are available ready for potting. The connector is shipped without the rear grommet which allows for the potting compound to be injected into the back of the connector. A potted Astro/348 is completely waterproof and is resistant to saltwater, aircraft lubricating oil, and jet fuels as indicated in Mil-C-81511.

HARDWARE ACCESSORIES

Straight Cable Clamps*

Dimensions (inches)

(Dimensions are the same for Series 1 and Series 2 Connectors)

***Cable clamp usage is recommended to prevent excessive strain from being applied to the wire terminations.**

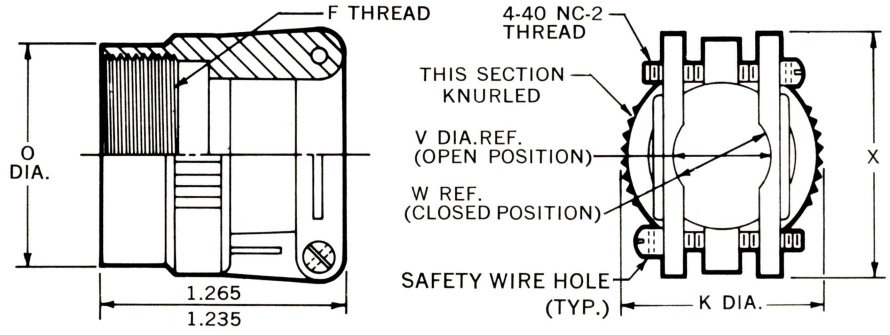

Support cable or wire at the connector and prevent twisting, pulling and strain on the wire terminations.

BASIC MILITARY PART NUMBER M81511/13

CINCH-NULINE Part No.	Shell Size	F Thread	K Dim Max.	O Dia. Max.	V Dia. Ref.	W Ref.	X Dim. Max.
348-260-08001	8	½-28UNEF-2B	.650	.555	.125	.062	.775
348-260-10001	10	⅝-28UN-2B	.775	.680	.250	.125	.955
348-260-14001	14	⅞-28UN-2B	1.022	.930	.500	.250	1.145
348-260-16001	16	1-28UN-2B	1.150	1.056	.625	.357	1.210
348-260-18001	18	1⅛-28UN-2B	1.280	1.180	.750	.500	1.330
348-260-20001	20	1¼-28UN-2B	1.400	1.305	.875	.625	1.470
348-260-22001	22	1⅜-28UN-2B	1.525	1.432	1.000	.625	1.580
348-260-24001	24	1½-28UN-2B	1.650	1.557	1.125	.750	1.720

1 Indicates Olive Drab Chromate Finish (150° C. Conn's.)
2 Indicates Dull Chromium Finish (175° and 200° C. Conn's.)

Notes: 1. Dimensions are after plating.

Dummy Receptacle

Dimensions (inches)

Orange figures indicate Series 1—Long Design

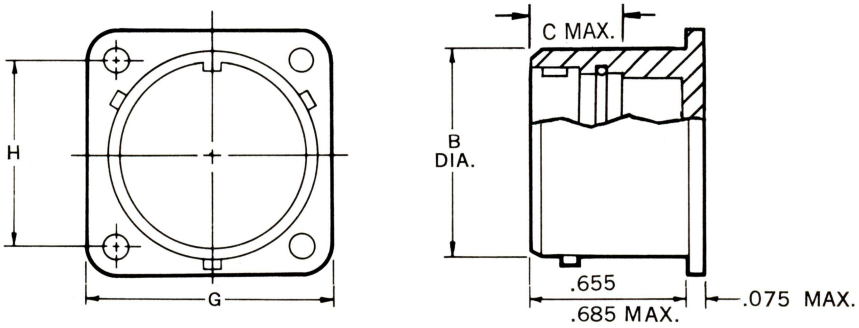

Anchor disconnected plugs and prevent damage or accumulation of dirt on face of plugs.

BASIC MILITARY PART NUMBERS M81511/19 (Series 2) M81511/30 (Series 1)

CINCH-NULINE Part No.	Shell Size	Use With	B Dia. Max.	C Max.	G Max.	H ±.005
348-167-08000-01	8	Series 2	.553	.485	.820	.594
348-292-08000-01		Series 1	.553	.625	.820	.594
348-167-10000-01	10	Series 2	.678	.485	.945	.719
348-292-10000-01		Series 1	.678	.625	.945	.719
348-167-14000-01	14	Series 2	.928	.485	1.133	.906
348-292-14000-01		Series 1	.928	.625	1.133	.906
348-167-16000-01	16	Series 2	1.054	.485	1.258	.969
348-292-16000-01		Series 1	1.054	.625	1.258	.969
348-167-18000-01	18	Series 2	1.178	.485	1.351	1.062
348-292-18000-01		Series 1	1.178	.625	1.351	1.062
348-292-20000-01	20	Series 1	1.303	.625	1.475	1.156
348-292-22000-01	22	Series 1	1.428	.625	1.570	1.250
348-292-24000-01	24	Series 1	1.553	.625	1.711	1.375

1 Indicates Olive Drab Chromate Finish (150° C. Conn's.)
2 Indicates Dull Chromium Finish (175° and 200° C. Conn's.)

Notes: 1. Dimensions are after plating. 2. Dummy Receptacles are aluminum with finish noted.

CAPS AND CHAINS

Metal caps seal face of unmated connectors and keep out dirt and foreign materials.

PLUG CAP
BASIC MILITARY PART NUMBER M81511/17 (Series 2)
M81511/29 (Series 1)

CINCH-NULINE Part No.	Shell Size	A Max.	E Ref.
348-139-08001	8	.845	3.0
348-289-08001	8		
348-139-10001	10	.970	3.0
348-289-10001	10		
348-139-14001	14	1.220	3.5
348-289-14001	14		
348-139-16001	16	1.345	3.5
348-289-16001	16		
348-139-18001	18	1.470	3.5
348-289-18001	18		
348-289-20001	20	1.595	3.5
348-289-22001	22	1.720	
348-289-24001	24	1.845	

1 Indicates Olive Drab Chromate Finish (150° C. Conn's.)
2 Indicates Dull Chromium Finish (175° and 200° C. Conn's.)

Dimensions (inches)

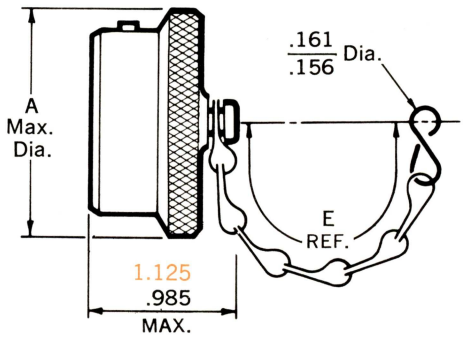

PLUG CAP

Note: Caps are aluminum. Chains (flat links) and eyelets are stainless steel.

Orange figures indicate Series 1—Long Design

RECEPTACLE CAP (For both Standard and Long)
BASIC MILITARY PART NUMBER M81511/18

CINCH-NULINE Part No.	Shell Size	A Max.	E Ref.
348-140-08001	8	.845	3.0
348-140-10001	10	.970	3.0
348-140-14001	14	1.220	3.5
348-140-16001	16	1.345	3.5
348-140-18001	18	1.470	3.5
348-140-24001	24	1.845	3.5
348-140-20001	20	1.595	3.5
348-140-22001	22	1.720	3.5
348-140-24001	24	1.845	3.5

1 Indicates Olive Drab Chromate Finish (150° C. Conn's.)
2 Indicates Dull Chromium Finish (175° and 200° C. Conn's.)

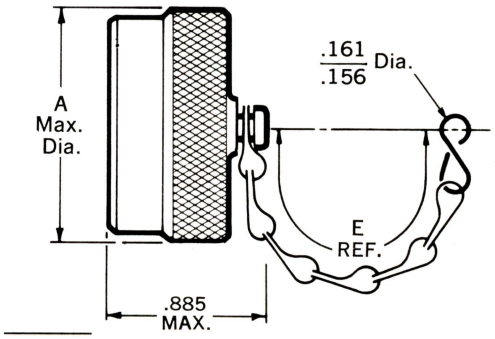

RECEPTACLE CAP

CONTACT SEALING PLUGS
BASIC MILITARY PART NUMBER M81511/15

Use with both Series 2—Standard and Series 1—Long Connectors.
Teflon sealing plugs assure proper connector sealing whenever all contacts are not employed. See page 25, photo 5.

Contact Size	CINCH-NULINE Part No.	A Dia. Max.	Color Code
23-22/28	348-132-22000	.050	White
20-20	348-132-20000	.070	Red
16-16	348-132-16000	.095	Blue
12-12	348-132-12000	.145	Yellow

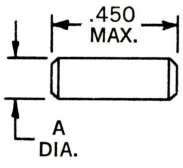

SUBMINIATURE CONNECTOR BACKSHELL J-ADAPTERS

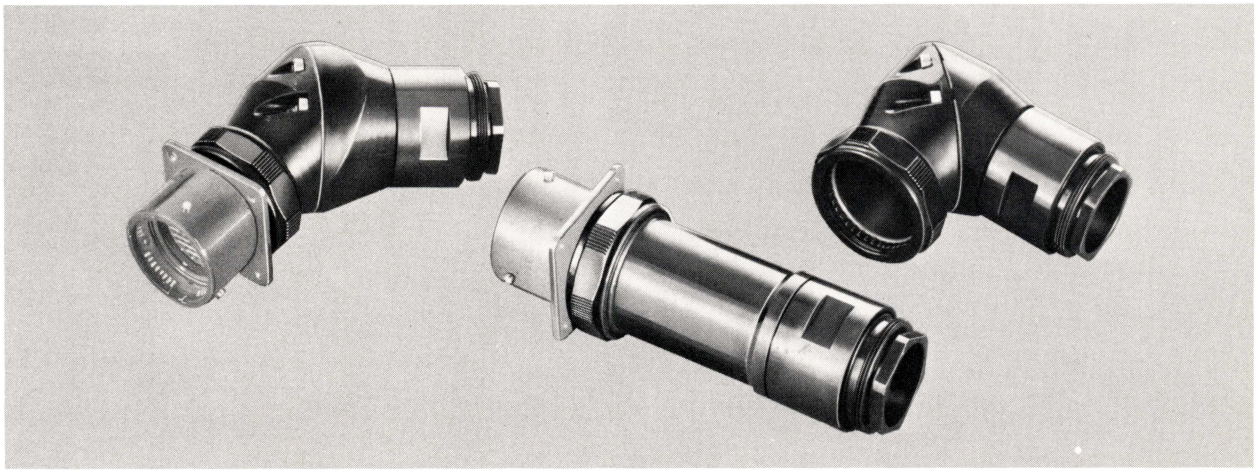

It is now possible to convert the MIL-C-81511, Astro/348 Series to a cable assembly connector with 100% EMR/RFI shielding . . . through the use of Cinch-Nuline Backshell J-Adapters meeting all the requirements of the tri-services military specification MIL-C-81511/43, these adapters offer fail-safe EMR/RFI shielding, moisture-proof and vibration-proof construction, quick installation, and easy connector access for service.

They are available in 45° and 90° offset and in-line configuration and in specification shell sizes from No. 8 through 24, for two temperature classes (150°C and 200°C) in both potted and grommet termination types.

IN-LINE BACKSHELL J-ADAPTER

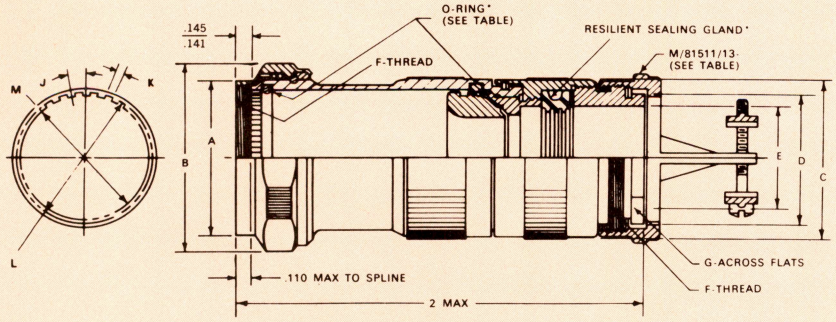

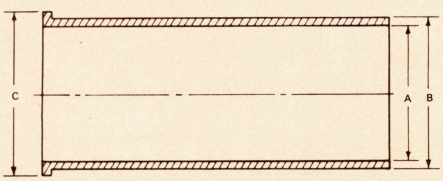

CABLE BUSHING
(See chart next page)

SHELL SIZE	A DIA.	B DIA.	C DIA.
8	.565/ .560	.850/ .830	.625/ .605
10	.690/ .685	.975/ .955	.750/ .730
14	.940/ .935	1.225/1.205	1.000/ .980
16	1.068/1.063	1.350/1.330	1.125/1.105
18	1.190/1.185	1.475/1.455	1.250/1.230
20	1.301/1.296	1.600/1.580	1.375/1.355
22	1.426/1.421	1.725/1.705	1.500/1.480
24	1.551/1.546	1.840/1.820	1.630/1.610

Note: Torque required to rotate nut in free condition shall be as follow
Engaging Direction—Less than 0.1 inch-pounds.
Disengaging Direction—See column "H" in table.
Values are in inch-pounds.

SHELL SIZE	150°C BACKSHELL "J" ADAPTER FOR USE WITH 150°C CLASS E (GROMMET) & CLASS P (POTTED) CON	
	ADAPTER (Less Cable Clamp)	
	CINCH-NULINE No.	Mil. Spec. No.
8	348-425-08101-011	M81511/43-08A1
10	10	10
14	14	14
16	16	16
18	18	18
20	20	20
22	22	22
24	348-425-24101-011	M81511/43-24A1

FAIL-SAFE EMR/RFI SHIELDING

Repeated flexing and constant vibration cannot break the electrical bond between the cable's shielding braid and the adapter. A novel labyrinth grounding clamp firmly grips the braid, and, through its design, multiplies the effective electrical contact area between the braid and adapter. Used with jacketed, shielded or unshielded cable, the J-adapter provides serviceable, environmentally sealed cable-to-connector termination.

EASY INSTALLATION AND MAINTENANCE

The separable split type design of the J-Adapters allows simple, straight-line cable connection and adapter assembly . . . even with angular type housings. In installation, all disassembled adapter parts are placed in sequence over the cable and moved back out of the way. Through this elimination of crowding, insertion of the individual conductors into the connector is made quickly and easily. Assembly is completed by attaching the adapter to the connector and cable and joining the two adapter shells. When service and maintenance are required, the adapter can be readily disassembled to provide access to the contacts and conductors. All capscrews are captive type with integral lockwashers.

MOISTURE-PROOF DESIGN WITHOUT POTTING

Silicon rubber seals of appropriate composition are used throughout the adapter shell and the connector, and a unique gland furnishes a seal between the adapter and cable jackets of a wide range of cable diameters that may be accommodated by the adapters. Moisture-proof integrity of the assembled J-adapter equals or exceeds that of "potted" type cable terminations.

VIBRATION-PROOF, ANTI-ROTATIONAL MOUNTING

The Cinch-Nuline Backshell J-Adapter for ASTRO/348 Series connectors provides positive torsional locking between the connector and adapter and dable. An internal spline in the adapter face mates with an external spline on the rear of the connector shell, and the vibration-proof adapter-to-connector nut holds securely under the most adverse service conditions. Cable rotation is similarly prevented by splined engagement of the braid clamping strain relief mechanism to the rear of the adapter shell.

CABLE BUSHINGS

The ranges of cable diameters that can be accommodated by Backsheel J-Adapters for ASTRO/348 Series connectors are greatly increased by the use of these resilient silicon rubber bushings. Designed to fit over the cable jacket within the adapter cable gland successive sizes of bushings may be "telescoped" within one another until the desired fit is achieved. Resultant moisture-proof integrity is equal to or better than "potted" type terminations.

NOTE: ADD SIZE 8 REDUCING SLEEVE & CNL PART NO. AS FOLLOWS

SHELL SIZE	DIMENSIONS			CNL PART NUMBER	MS PART NO.
	A	B	C		
8	.050	.175	.299	348-478-08001	MS3420-00 PART NUMBERS WILL BE ASSIGNED IN THE NEAR FUTURE
10	.050	.175	.299	348-478-10001	
12	.050	.175	.299	348-478-12001	
14	.050	.175	.299	348-478-14001	
16	.050	.175	.299	348-478-16001	
18	.050	.175	.299	348-478-18001	
20	.050	.175	.299	348-478-20001	
22	.050	.175	.299	348-478-22001	
24	.050	.175	.299	348-478-24001	

D DIA.	E CABLE OD		F THREAD CLASS 2	G	H MIN. (See Note)	SPLINE					O-RING
	MAX.	MIN.				J	NO. OF TEETH	K	L DIA.	M DIA.	*
.435/ .415	—	—	1/2-28UNEF	5/16	0.5	20	18	.050/.048	.473/ .469	.446/ .443	MS9241-013
.560/ .540	.325	.225	5/8-28UN	7/16	0.6	15	24	.048/.046	.598/ .594	.571/ .568	MS9241-015
.810/ .790	.550	.450	7/8-28UN	11/16	0.8	12	30	.053/.051	.848/ .844	.821/ .818	MS9241-019
.935/ .915	.675	.575	1 -28UN	13/16	0.8	10	36	.052/.050	.973/ .969	.946/ .943	MS9241-021
1.060/1.040	.800	.700	1 1/8-28UN	15/16	1.0	9	40	.052/.050	1.098/1.094	1.071/1.068	MS9241-023
1.185/1.165	.925	.825	1 1/4-28UN	1 1/16	1.0	9	40	.059/.056	1.223/1.219	1.196/1.193	MS9241-025
1.310/1.290	1.050	.950	1 3/8-28UN	1 3/16	1.0	9	40	.062/.059	1.348/1.344	1.321/1.318	MS9241-027
1.435/1.415	1.175	1.075	1 1/2-28UN	1 5/16	1.0	9	40	.069/.066	1.473/1.469	1.446/1.443	MS9241-028

ADAPTER AND CABLE CLAMP/ORDERING INFORMATION

		200°C BACKSHELL "J" ADAPTER FOR USE WITH 200°C CLASS F & A (GROMMET), AND CLASS T & C (POTTED) CONNECTORS			
ADAPTER (With Cable Clamp)	CABLE CLAMP	ADAPTER (Less Cable Clamp)		ADAPTER (With Cable Clamp)	CABLE CLAMP
CINCH-NULINE No.	Mil. Spec. No.	CINCH-NULINE No.	Mil. Spec. No.	CINCH-NULINE No.	Mil. Spec. No.
348-425-08101-012	M81511/13-08A1	348-425-08101-021	M81511/43-08B1	348-425-08101-022	M81511/13-08B1
10	10	10	10	10	10
14	14	14	14	14	14
16	16	16	16	16	16
18	18	18	18	18	18
20	20	20	20	20	20
22	22	22	22	22	22
348-425-24101-012	M81511/13-24A1	348-425-24101-021	M81511/43-24B1	348-425-24101-022	M81511/13-24B1

45° BACKSHELL J-ADAPTER

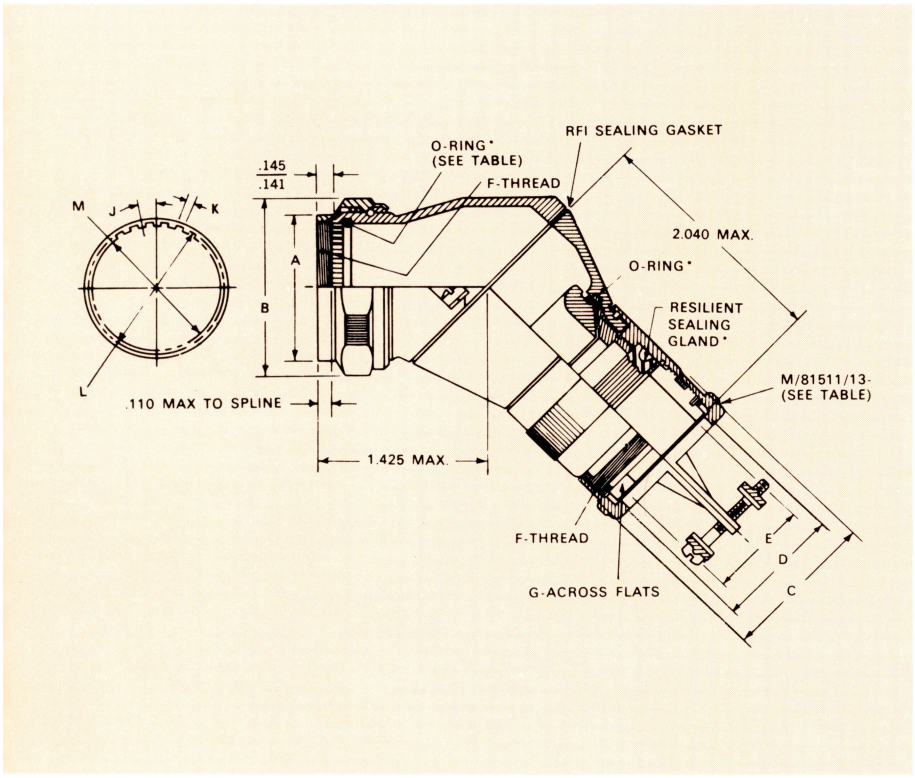

SHELL SIZE	A DIA.	B DIA.	C DIA.
8	.565/ .560	.850/ .830	.625/ .605
10	.690/ .685	.975/ .955	.750/ .730
14	.940/ .935	1.225/1.205	1.000/ .980
16	1.068/1.063	1.350/1.330	1.125/1.105
18	1.190/1.185	1.475/1.455	1.250/1.230
20	1.301/1.296	1.600/1.580	1.375/1.355
22	1.426/1.421	1.725/1.705	1.500/1.480
24	1.551/1.546	1.840/1.820	1.630/1.610

Note: Torque required to rotate nut in free condition shall be as follow
Engaging Direction—Less than 0.1 inch-pounds.
Disengaging Direction—See column "H" in table.
Values are in inch-pounds.

SHELL SIZE	150°C BACKSHELL "J" ADAPTER FOR USE WITH 150°C CLASS E (GROMMET) & CLASS P (POTTED) CON	
	ADAPTER (Less Cable Clamp)	
	CINCH-NULINE No.	Mil. Spec. No.
8	348-425-08201-011	M81511/43-08B2
10	10	10
14	14	14
16	16	16
18	18	18
20	20	20
22	22	22
24	348-425-24201-011	M81511/43-24A1

90° BACKSHELL J-ADAPTER

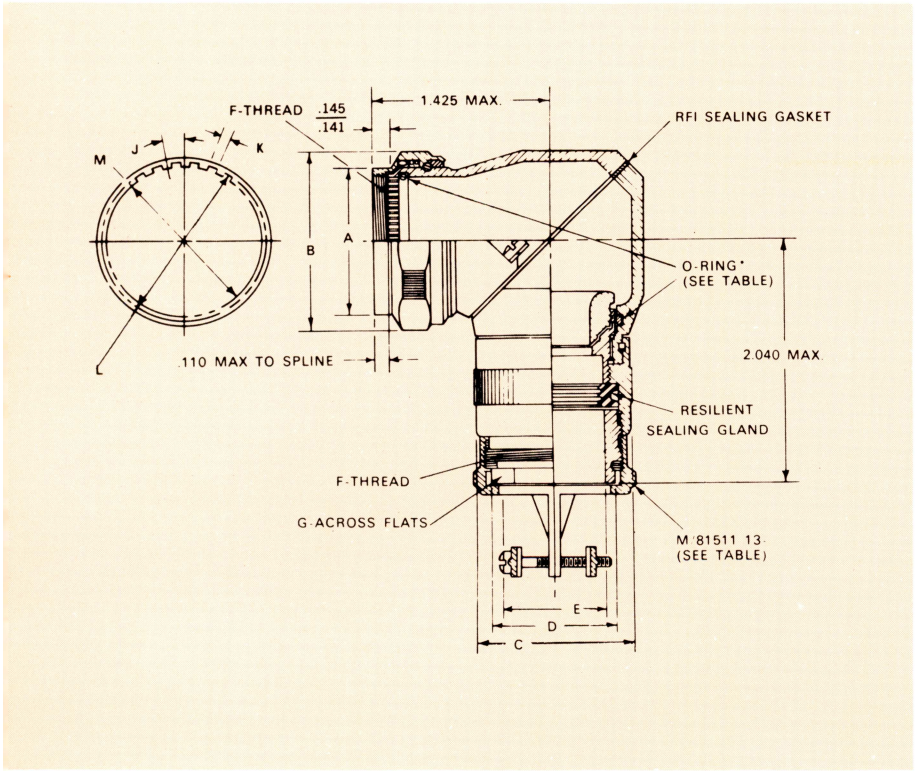

SHELL SIZE	A DIA.	B DIA.	C DIA.
8	.565/ .560	.850/ .830	.625/ .605
10	.690/ .685	.975/ .955	.750/ .730
14	.940/ .935	1.225/1.205	1.000/ .980
16	1.068/1.063	1.350/1.330	1.125/1.105
18	1.190/1.185	1.475/1.455	1.250/1.230
20	1.301/1.296	1.600/1.580	1.375/1.355
22	1.426/1.421	1.725/1.705	1.500/1.480
24	1.551/1.546	1.840/1.820	1.630/1.610

Note: Torque required to rotate nut in free condition shall be as follow
Engaging Direction—Less than 0.1 inch-pounds.
Disengaging Direction—See column "H" in table.
Values are in inch-pounds.

SHELL SIZE	150°C BACKSHELL "J" ADAPTER FOR USE WITH 150°C CLASS E (GROMMET) & CLASS P (POTTED) CO	
	ADAPTER (Less Cable Clamp)	
	CINCH-NULINE No.	Mil. Spec. No.
8	348-425-08301-011	M81511/43-08A3
10	10	10
14	14	14
16	16	16
18	18	18
20	20	20
22	22	22
24	348-425-24301-011	M81511/43-24A3

D DIA.	E CABLE OD		F THREAD CLASS 2	G	H MIN. (See Note)	SPLINE					O-RING
	MAX.	MIN.				J	NO. OF TEETH	K	L DIA.	M DIA.	*
.435/ .415	—	—	½-28UNEF	5/16	0.5	20	18	.050/.048	.473/ .469	.446/ .443	MS9241-013
.560/ .540	.325	.225	5/8-28UN	7/16	0.6	15	24	.048/.046	.598/ .594	.571/ .568	MS9241-015
.810/ .790	.550	.450	7/8-28UN	11/16	0.8	12	30	.053/.051	.848/ .844	.821/ .818	MS9241-019
.935/ .915	.675	.575	1 -28UN	13/16	0.8	10	36	.052/.050	.973/ .969	.946/ .943	MS9241-021
1.060/1.040	.800	.700	1 1/8-28UN	15/16	1.0	9	40	.052/.050	1.098/1.094	1.071/1.068	MS9241-023
1.185/1.165	.925	.825	1 1/4-28UN	1 1/16	1.0	9	40	.059/.056	1.223/1.219	1.196/1.193	MS9241-025
1.310/1.290	1.050	.950	1 3/8-28UN	1 3/16	1.0	9	40	.062/.059	1.348/1.344	1.321/1.318	MS9241-027
1.435/1.415	1.175	1.075	1½-28UN	1 5/16	1.0	9	40	.069/.066	1.473/1.469	1.446/1.443	MS9241-028

ADAPTER AND CABLE CLAMP/ORDERING INFORMATION

		200°C BACKSHELL "J" ADAPTER FOR USE WITH 200°C CLASS F & A (GROMMET), AND CLASS T & C (POTTED) CONNECTORS			
ADAPTER (With Cable Clamp)	CABLE CLAMP	ADAPTER (Less Cable Clamp)		ADAPTER (With Cable Clamp)	CABLE CLAMP
CINCH-NULINE No.	Mil. Spec. No.	CINCH-NULINE No.	Mil. Spec. No.	CINCH-NULINE No.	Mil. Spec. No.
348-425-08201-012	M81511/43-08A2	348-425-08201-021	M81511/43-08B1	348-425-08201-022	M81511/13-08B1
10	10	10	10	10	10
14	14	14	14	14	14
16	16	16	16	16	16
18	18	18	18	18	18
20	20	20	20	20	20
22	22	22	22	22	22
348-425-24201-012	M81511/43-24A2	348-425-24201-021	M81511/43-24B2	348-425-24201-022	M81511/13-24B1

D DIA.	E CABLE OD		F THREAD CLASS 2	G	H MIN. (See Note)	SPLINE					O-RING
	MAX.	MIN.				J	NO. OF TEETH	K	L DIA.	M DIA.	*
.435/ .415	—	—	½-28UNEF	5/16	0.5	20	18	.050/.048	.473/ .469	.446/ .443	MS9241-013
.560/ .540	.325	.225	5/8-28UN	7/16	0.6	15	24	.048/.046	.598/ .594	.571/ .568	MS9241-015
.810/ .790	.550	.450	7/8-28UN	11/16	0.8	12	30	.053/.051	.848/ .844	.821/ .818	MS9241-019
.935/ .915	.675	.575	1 -28UN	13/16	0.8	10	36	.052/.050	.973/ .969	.946/ .943	MS9241-021
1.060/1.040	.800	.700	1 1/8-28UN	15/16	1.0	9	40	.052/.050	1.098/1.094	1.071/1.068	MS9241-023
1.185/1.165	.925	.825	1 1/4-28UN	1 1/16	1.0	9	40	.059/.056	1.223/1.219	1.196/1.193	MS9241-025
1.310/1.290	1.050	.950	1 3/8-28UN	1 3/16	1.0	9	40	.062/.059	1.348/1.344	1.321/1.318	MS9241-027
1.435/1.415	1.175	1.075	1½-28UN	1 5/16	1.0	9	40	.069/.066	1.473/1.469	1.446/1.443	MS9241-028

ADAPTER AND CABLE CLAMP/ORDERING INFORMATION

		200°C BACKSHELL "J" ADAPTER FOR USE WITH 200°C CLASS F & A (GROMMET), AND CLASS T & C (POTTED) CONNECTORS			
ADAPTER (With Cable Clamp)	CABLE CLAMP	ADAPTER (Less Cable Clamp)		ADAPTER (With Cable Clamp)	CABLE CLAMP
CINCH-NULINE No.	Mil. Spec. No.	CINCH-NULINE No.	Mil. Spec. No.	CINCH-NULINE No.	Mil. Spec. No.
348-425-08301-012	M81511/13-08A1	348-425-08301-021	M81511/43-08B3	348-425-08301-022	M81511/13-08B1
10	10	10	10	10	10
14	14	14	14	14	14
16	16	16	16	16	16
18	18	18	18	18	18
20	20	20	20	20	20
22	22	22	22	22	22
348-425-24301-012	M81511/13-24A1	348-425-24301-021	M81511/43-24B3	348-425-24301-022	M81511/13-24B1

TOOLS FOR CONTACT CRIMPING, INSERTION AND REMOVAL

#23-22 & 23-28 CRIMPING TOOLS

294-268 294-297

#20-20, 16-16 & 12-12 CONTACT CRIMPING TOOLS

294-1462 294-1718

ORDERING

Order proper tools from table below according to contact size. Note that there are alternative Crimping Tools available. Consult factory for information on semi-automatic crimping equipment for large production runs.

#23-22 CONTACT INSERTION AND REMOVAL TOOLS (Typical)

Pin & Socket Contact Insertion Tool **294-278**

Socket Contact removal tool **294-287**

Pin Contact removal tool **294-286**

Contact Size*	Crimping Tool		Locator or Positioner**	Wire Range	Cinch-Nuline Part No.	MS Part No.	Cinch-Nuline Part No.		MS Part No.	
	Cinch-Nuline Part No.	MS Part No.	Cinch-Nuline Part No.		Pin & Socket Insertion Tool (Color)	Pin & Socket Insertion Tool	Removal Pin Tool (Color)	Removal Socket Tool (Color)	Removal Pin Tool	Removal Socket Tool
23-22	294-268 294-297	M22520/2-01 M22520/2-01	294-1551-01, -02 294-1551-01, -02	#22 #26 #22 #26	294-278 (Green)	MS3323-22	294-286 (Yellow)	294-287 (Yellow)	MS3342-23	MS3344-23
23-28	294-268 294-297	M22520/2-01 M22520/2-01	294-1551-01, -02 294-1551-01, -02	#28 #32 #28 #32						
20-20	294-1462 294-1718	MS3323-20 M22520/1-01	294-1722-01 294-1722-02	#20 #26 #20 #26	294-27 (Red)	MS3323-20	294-28 (Red)	294-29 (Red)	MS3342-20	MS3344-20
16-16	294-1462 294-1718	MS3323-16 M22520/1-01	294-1722-01 294-1722-02	#16 #20 #16 #20	294-30 (Blue)	MS3323-16	294-31 (Blue)	294-32 (Blue)	MS3342-16	MS3344-16
12-12	294-1462 294-1718	MS3323-12 M22520/1-01	294-1722-01 294-1722-02	#12 #14 #12 #14	294-33 (Yellow)	MS3323-12	294-34 (Yellow)	294-35 (Yellow)	MS3342-12	MS3344-12

*See page 8 for contact information. **Must be ordered separately.

HOW TO CRIMP ASTRO/348 CONTACTS (SIZE 23-22 CONTACT TOOLS ARE ILLUSTRATED)

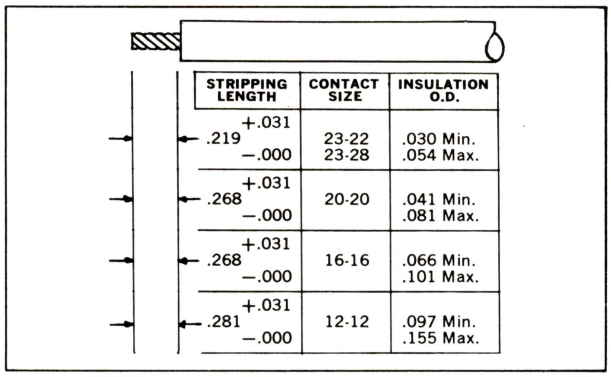

STRIPPING LENGTH	CONTACT SIZE	INSULATION O.D.
+.031 .219 −.000	23-22 23-28	.030 Min. .054 Max.
+.031 .268 −.000	20-20	.041 Min. .081 Max.
+.031 .268 −.000	16-16	.066 Min. .101 Max.
+.031 .281 −.000	12-12	.097 Min. .155 Max.

1. Strip wire insulation to the required length shown. Be careful not to cut or gall wire strands or insulation. If ends fray, twist them back to their original lay.

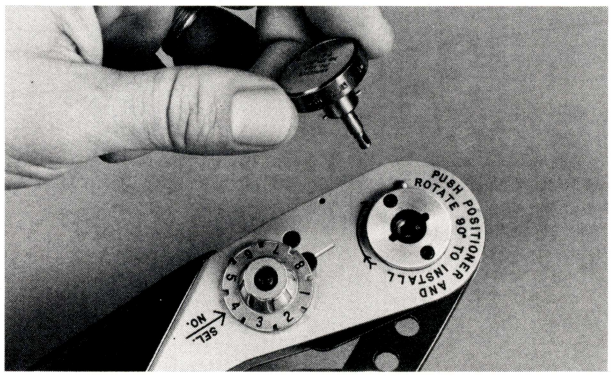

2. Remove safety clip and install the contact locator into the crimping tool by pushing and twisting the bayonet lock locator 90°. Re-install safety clip to make sure locator stays in proper position.

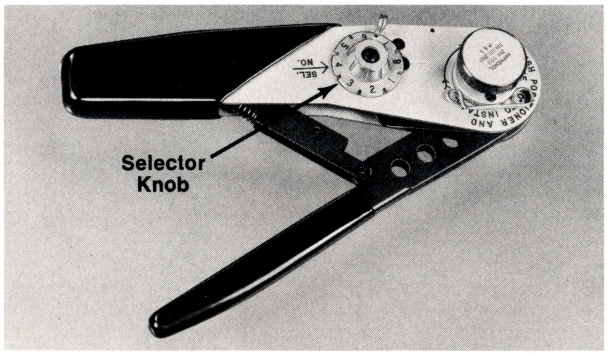

3. Refer to selection table on page 22 for proper crimp tool and its locator or positioner. For tools with locators (such as illustrated) rotate selector knob to proper setting as listed in table. (Above right)

For #23-22 contacts, rotate knob on crimping tool to place setting in line with index mark. (See table.)

For 20-20, 16-16 and 12-12 contacts, release and rotate turret knob to proper contact size (per color code) and push in to lock position.

Adjust slide knob on handle to the proper wire size or selector no.

Wire and Crimp Tool Settings

Contact Size	32 GA	30 GA	28 GA	26 GA	24 GA	22 GA	20 GA	18 GA	16 GA	14 GA	12 GA	Crimp Tool Number
23-28	4	5	5									294-268 OR 294-297
23-22				3	4	5						
20-20				1	2	3	4					294-1462 OR 294-1718
16-16							5	5	6			
12-12										6	7	

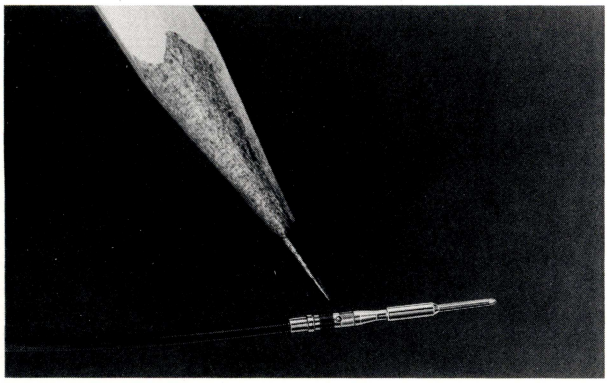

4. Insert the stripped wire into the contact pocket until it is visible through inspection hole.

continued next page

HOW TO CRIMP ASTRO/348 CONTACTS (CONTINUED)

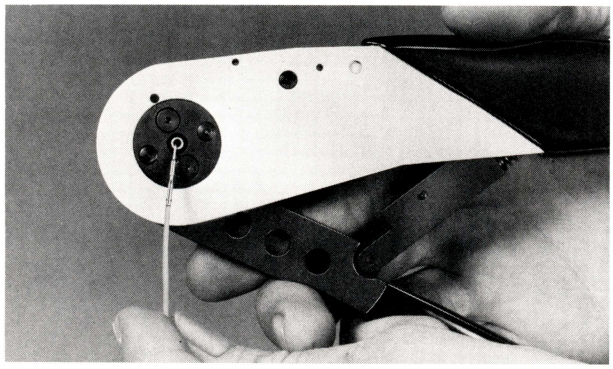

5. Fully seat the contact in the contact locator. Crimp in one stroke. (The ratchet will not release the jaws until the tool has completed one full stroke.)

Inspect the crimp for wire visibility through the inspection hole. Contact is now ready for insertion into the connector.

HOW TO INSERT ASTRO/348 CONTACTS

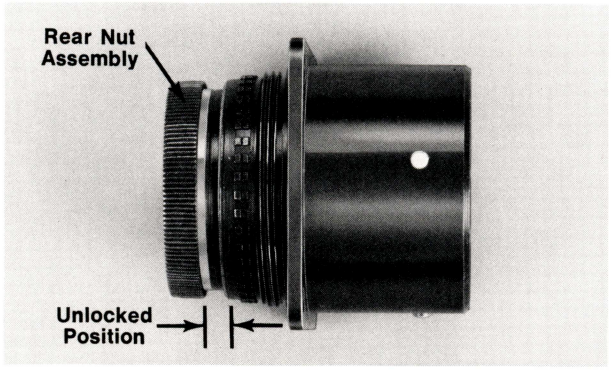

1. The rear nut assembly must be unlocked before any contacts can be inserted. Turn it counterclockwise until some resistance to turning is felt. (2½ turns, or .075 min. space is required.)

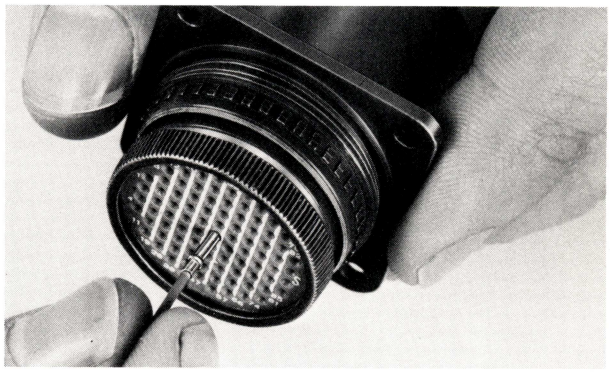

2. Place the crimped contact into the desired hole by hand until only the crimped portion of the contact extends from the grommet. Then position the insertion tool around the rear of the contact shoulder.

3. Poke home or seat contact firmly with insertion tool. To use the tool, fit it around the rear of contact shoulder. Note the slight angle at which the tool is held; this helps retain the tool on the contact. This very slight angle assures poking the contact fully home and prevents the tool from slipping off the rear shoulder of the contact.

4. Remove the tool by sliding it along the wire insulation until it clears the resilient grommet.

continued next page

HOW TO INSERT ASTRO/348 CONTACTS (CONTINUED)

5. To provide proper sealing, insert unwired contact and a sealing plug in all unused holes. After all wired contacts are fully tested and sealing plugs are inserted, rotate the rear nut assembly by turning it clockwise until the colored stripe is not visible. The nut must be fully bottomed against the rear shell (as shown in photo 1, below). Then slide the cable support hardware to the rear grommet and tighten.

HOW TO REMOVE ASTRO/348 CONTACTS

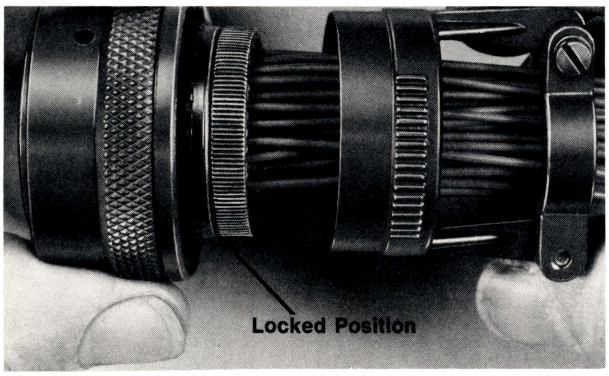

1. Remove cable support or accessory hardware back over wire bundle. Caution: Loosen cable straps prior to removal of clamp.

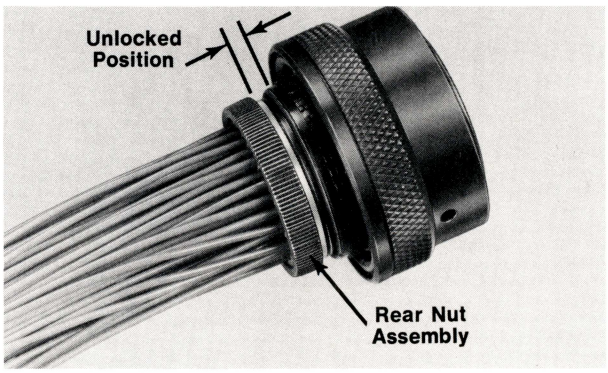

2. Loosen the rear nut assembly by turning it counter-clockwise until some resistance to turning is felt. (2½ turns or .075 minimum space is required.)

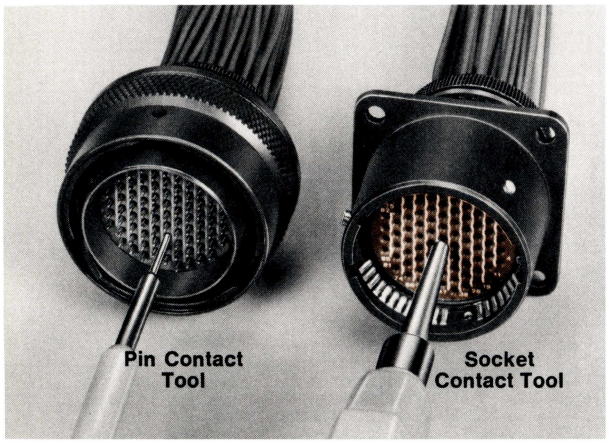

3. Select the proper contact removal tool. To remove pin contact, align and place tool over exposed pin probe. To remove the socket contact, place tool probe through insert and into socket contact body. Note: The protective sleeve will retract into the tool as force is applied. Then apply force with a straight axial motion perpendicular to the insert face.

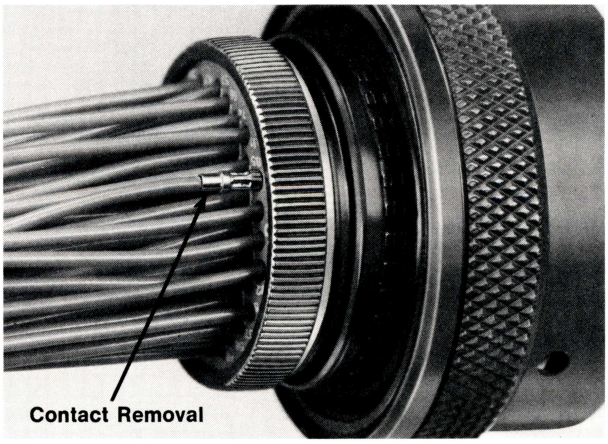

4. When the tool has bottomed against the insert face, the contact will appear at the grommet end and may be removed by pulling on the wire. Caution: remove only one contact at a time to prevent possible grommet damage.

CONNECTOR WEIGHTS IN POUNDS (±10%)
SERIES 2 (STANDARD) CONNECTORS LESS CONTACTS (EXCEPT HERMETIC)

Shell Size & Contact Arrangement	Contact Size	Mil-C-81511/06 Plug Shell Assembly		RECEPTACLES						HERMETIC RECEPTACLES		
				Mil-C-81511/01 Square Flange		Mil-C-81511/03 Single Hole Mount		Mil-C-81511/05 Cable Mount		Mil-C-81511/02 Solder Flange Mount	Mil-C-81511/04 Single Hole Mount	Mil-C-81511/28 Single Hole Mount
		Pin Insert	Socket Insert	Pin Insert	Socket Insert	Pin Insert	Socket Insert	Pin Insert	Socket Insert	Pin Insert	Pin Insert	Pin & Socket Feed Thru
08-04	23-22	.027	.027	.022	.022	.028	.028	.025	.025	.026	.039	.078
10-03	16-16	.034	.035	.030	.031	.038	.039	.036	.037	.038	.058	.114
10-05	20-20	.034	.036	.030	.031	.038	.039	.036	.037	.039	.059	.115
10-12	23-22	.034	.035	.029	.030	.037	.038	.035	.036	.038	.059	.115
14-04	12-12	.054	.058	.046	.051	.060	.064	.056	.060	.059	.093	.157
14-09	16-16	.053	.057	.046	.050	.059	.063	.056	.060	.057	.090	.155
14-19	20-20	.053	.057	.046	.050	.059	.063	.056	.059	.058	.091	.156
14-37	23-22	.053	.057	.046	.050	.059	.063	.056	.059	.058	.091	.156
16-07	12-12	.062	.067	.057	.062	.071	.076	.066	.071	.075	.108	.178
16-14	16-16	.062	.067	.057	.062	.071	.076	.066	.071	.073	.106	.175
16-27	20-20	.062	.067	.057	.062	.071	.076	.066	.071	.074	.107	.176
16-55	23-22	.062	.067	.057	.062	.071	.077	.066	.071	.073	.106	.176
18-09	12-12	.074	.081	.066	.073	.081	.087	.076	.083	.095	.130	.198
18-21	16-16	.072	.079	.064	.071	.079	.086	.074	.081	.093	.127	.196
18-38	20-20	.073	.080	.065	.072	.080	.087	.075	.082	.094	.128	.197
18-85	23-22	.073	.079	.064	.071	.080	.086	.075	.081	.093	.128	.196

CONTACTS

Size	Type	
	Pin	Socket
12-12	.00225	.00240
16-16	.00127	.00122
20-20	.00066	.00062
23-22	.00031	.00035

CONNECTOR WEIGHTS IN POUNDS (±10%)
SERIES 1 (LONG) CONNECTORS LESS CONTACTS (EXCEPT HERMETIC)

Shell Size & Contact Arrangement	Contact Size	Mil-C-81511/26 Plug Shell Assembly		RECEPTACLES						HERMETIC RECEPTACLES		
				Mil-C-81511/21 Square Flange		Mil-C-81511/23 Single Hole Mount		Mil-C-81511/25 Cable Mount		Mil-C-81511/22 Solder Flange Mount	Mil-C-81511/24	Mil-C-81511/27
											Single Hole Mount	
		Pin Insert	Socket Insert	Pin Insert	Socket Insert	Pin Insert	Socket Insert	Pin Insert	Socket Insert	Pin Insert	Pin Insert	Pin & Socket Feed Thru
08-04	23-22	.031	.032	.025	.025	.031	.032	.028	.029	.032	.048	.096
10-03	16-16	.042	.044	.033	.035	.041	.043	.038	.040	.050	.077	.142
10-05	20-20	.042	.043	.033	.034	.041	.042	.038	.039	.050	.077	.142
10-12	23-22	.042	.043	.033	.034	.041	.042	.038	.039	.050	.077	.142
14-04	12-12	.062	.071	.048	.057	.062	.070	.059	.067	.077	.127	.202
14-09	16-16	.062	.071	.048	.057	.062	.070	.059	.067	.076	.126	.201
14-19	20-20	.062	.071	.048	.057	.062	.070	.059	.067	.076	.126	.201
14-37	23-22	.062	.071	.048	.057	.062	.070	.059	.067	.076	.126	.201
16-07	12-12	.074	.086	.061	.071	.081	.093	.070	.083	.094	.152	.227
16-14	16-16	.074	.086	.061	.071	.081	.093	.071	.083	.093	.151	.226
16-27	20-20	.074	.086	.061	.071	.081	.093	.070	.082	.094	.152	.227
16-55	23-22	.074	.086	.061	.072	.081	.093	.069	.081	.093	.151	.226
18-09	12-12	.092	.107	.078	.094	.093	.108	.083	.100	.119	.162	.240
18-21	16-16	.091	.106	.078	.094	.093	.109	.083	.099	.116	.159	.237
18-38	20-20	.091	.106	.078	.094	.093	.108	.083	.099	.118	.161	.239
18-85	23-22	.092	.107	.078	.093	.093	.107	.083	.098	.117	.160	.238
20-11	12-12	.101	.123	.092	.115	.099	.122	.099	.121	.129	.168	.259
20-24	16-16	.100	.121	.092	.113	.099	.120	.098	.119	.126	.165	.256
20-45	20-20	.100	.121	.092	.113	.099	.120	.098	.119	.128	.167	.258
20-92	23-22	.100	.121	.092	.113	.099	.120	.098	.119	.127	.166	.257
22-14	12-12	.119	.148	.102	.130	.118	.147	.109	.137	.150	.184	.273
22-32	16-16	.119	.146	.101	.128	.118	.145	.108	.135	.146	.180	.269
22-61	20-20	.119	.146	.101	.128	.118	.145	.108	.135	.148	.182	.271
22-121	23-22	.119	.146	.101	.128	.118	.145	.108	.135	.147	.181	.270
24-19	12-12	.144	.176	.116	.147	.143	.175	.127	.158	.170	.204	.298
24-41	16-16	.143	.172	.116	.145	.143	.176	.126	.159	.166	.200	.294
24-74	20-20	.143	.175	.115	.147	.143	.176	.126	.159	.168	.202	.296
24-155	23-22	.143	.175	.120	.152	.143	.176	.126	.159	.167	.201	.295

CONTACTS

	Type	
Size	Pin	Socket
12-12	.00225	.00447
16-16	.00127	.00210
20-20	.00066	.00107
23-22	.00031	.00049

Cinch district sales offices and representatives

ALABAMA

Huntsville, 35806
Huntsville-Madison County Jetport
P.O. Box 6045
Phone: (205) 772-9656

CALIFORNIA

Monterey Park, 91754
887 South Atlantic Boulevard
Phone: (213) 282-8416
TWX: 910-589-3386

Mountain View, 94040
2680 Bayshore Frontage Road
Phone: (415) 969-2252
TWX: 910-379-6482

COLORADO

Boulder, 80302
Straube Associates
2690 28th Street
Phone: (303) 443-8600
TWX: 910-940-3244

DISTRICT OF COLUMBIA

Springfield, Virginia 22151
8001 Forbes Place, Suite 205
Phone: (703) 321-7930
TWX: 710-831-1114

FLORIDA

Boca Raton, 33432
1499 S.W. Fifth Avenue
Phone: (305) 399-4884
TWX: 510-953-7537

Orlando, 32803
988 Woodcock Rd.
Phone: (305) 894-6881
TWX: 810-850-4113

ILLINOIS

Elk Grove Village, 60007
1982 Lunt Avenue
Phone: (312) 437-5110
TWX: 910-222-1796

INDIANA

Indianapolis, 46205
2511 E. 46th Street, J-1
Phone: (317) 547-9411
TWX: 810-341-3301

MASSACHUSETTS

Reading, 01867
100 Main Street
Phone: (617) 944-3020
TWX: 710-393-6565

MICHIGAN

Southfield, 48075
21311 Civic Center Dr.
Phone: (313) 357-3700
TWX: 810-221-7096

MINNESOTA

Minneapolis, 55435
7400 Metro Blvd.
Suite 360
Phone: (612) 835-5454
TWX: 910-576-2721

MISSOURI

St. Louis, 63105
8000 Bonhomme
Phone: (314) 727-7370
TWX: 910-761-2142

NEW JERSEY

Clifton, 07015
404 Clifton Avenue
Phone: (201) 546-0990

NEW MEXICO

Albuquerque, 87111
Straube Associates
P.O. Box 14698
Phone: (505) 294-1880

NEW YORK

Manlius, 13104
134 Stanwood Lane
Phone: (315) 637-3282

Melville, 11746
425 Broad Hollow Road
Phone: (516) 293-9000
TWX: 510-224-6587

Millbrook, 12545
P.O. Box AD
Phone: (914) 677-3488
TWX: 510-248-4131

Fairport, 14450
46 Aldwick Rise
Phone: (716) 223-3648

NORTH CAROLINA

Charlotte, 28201
Suite 236 One Woodlawn Green
Phone: (704) 376-6811
TWX: 810-621-0457

OHIO

Dayton, 45409
1250 W. Dorothy Lane
Phone: (513) 298-9862
TWX: 810-459-1631

OKLAHOMA

Oklahoma City, 73112
3923 North Pennsylvania Avenue
Phone: (405) 524-2040

PENNSYLVANIA

Glenside, 19038
1601 Church Road
Phone: (215) 887-7520
TWX: 510-665-2814

TEXAS

Dallas, 75247
1066 W. Mockingbird Lane
Phone: (214) 637-6650
TWX: 910-861-4552

Houston, 77036
6420 Hillcroft, Suite 115A
Phone: (713) 771-7812
TWX: 910-881-2698

UTAH

Salt Lake City, 84109
Straube Associates
P.O. Box 9248
Phone: (801) 328-4513

WASHINGTON

Seattle, 98103
Don Smith Sales Company
2320 North 45th Street
Phone: (206) 633-3160
TWX: 910-444-2005

PUERTO RICO

San Juan, Puerto Rico, 00936
Moriss Saliss
Box 2307 G.P.O.
Phone: (809) 764-1842
766-6248
TWX: 345-0328

TRW® CINCH CONNECTORS
AN ELECTRONIC COMPONENTS DIVISION OF TRW INC.

1015 SOUTH SIXTH STREET, MINNEAPOLIS, MINNESOTA 55415 • PHONE: (612) 339-8301 — TWX: 910-576-2748

FORM CN-5 PRINTED IN U.S.A. 10M 12-72